# DESPIECE TECNICO

# LA-120 MP

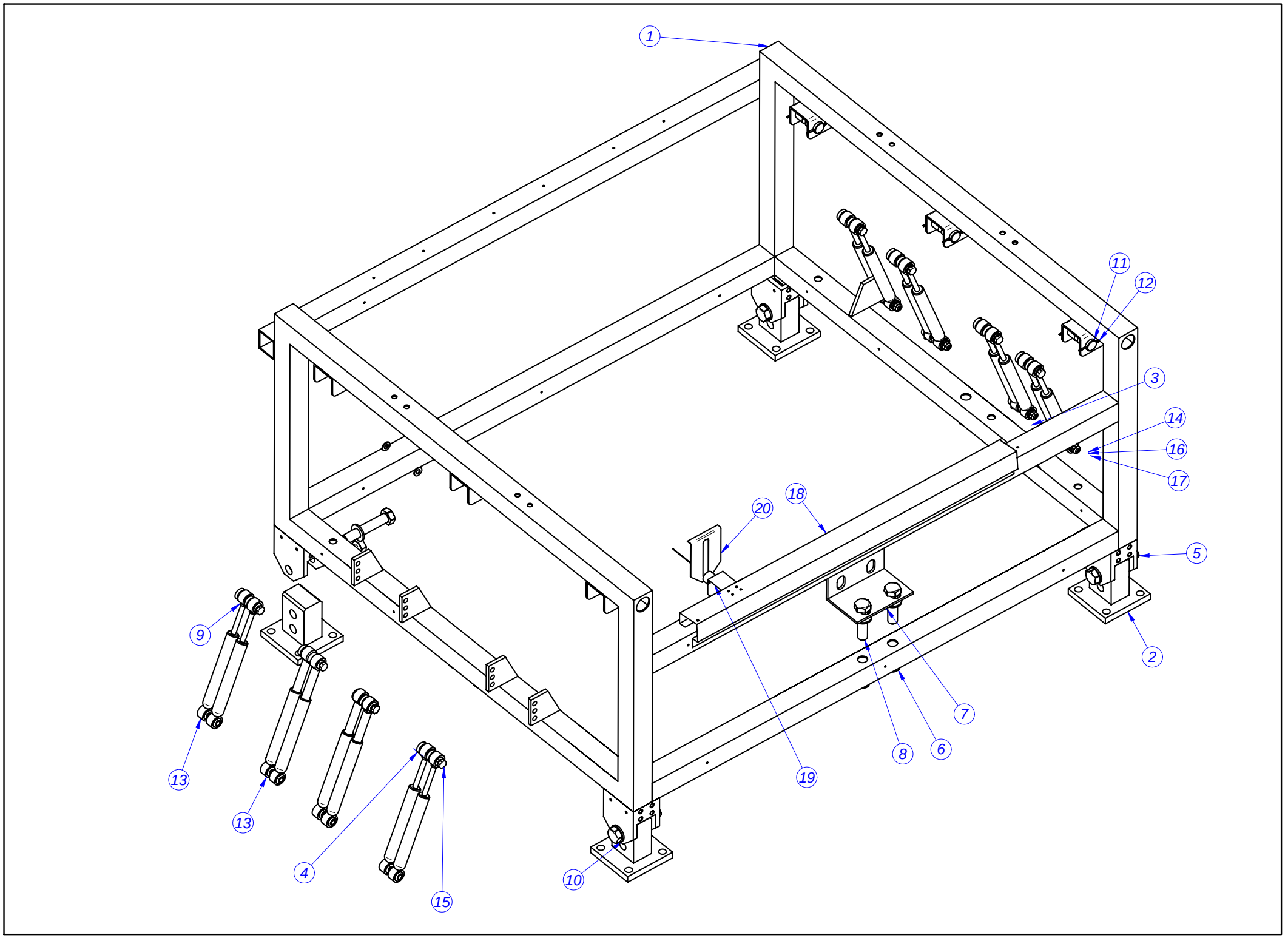
1
11
12
3
14
16
17
18
20
5
9
2
13
7
8
6
19
13
4
15
10

| MOD. | LAVADORA 120 | | ZONA | ARMAZON | |
|---|---|---|---|---|---|
| Nº | CODIGO | DENOMINACION | Cant. | | |
| 1 | P680101000 | ARMAZON 120 COMPLETO | 1 | | |
| 2 | P660107000 | PATA RIGIDA 60 | 4 | | |
| 4 | Q221306000 | TUE.EX.AUT.M10 8.8 ZIN | 10 | | |
| 5 | Q151302000 | TORNILLO EXAG.M.20x110 | 4 | | |
| 6 | Q221348000 | TUERCA EXAG.AUTOBL.M.20 | 10 | | |
| 7 | P680111000 | ANCLAJE 120 | 3 | | |
| 8 | Q151354000 | TORNILLO EXAG.M.20x80 | 2 | | |
| 9 | P620107000 | CASQUILLO AMORTIGUADORES | 28 | | |
| 10 | Q231311000 | ARANDELA A21 | 20 | | |
| 11 | P680206000 | PASADOR MUELLE 120 | 6 | | |
| 12 | Q352017000 | PASADOR DE ALETAS 3 X 50 | 12 | | |
| 13 | P680220000 | AMORTIGUADOR LF-120 | 8 | | |
| 14 | P630110000 | AMORTIGUADOR 250N SUSPA | 8 | | |
| 15 | Q011360100 | TORNILLO EXAGONAL M10X90 | 6 | | |
| 16 | Q232060000 | ARANDELA A10 | 19 | | |
| 17 | Q151525000 | EXAG. M10X150(8.8) DIN931 | 2 | | |
| 18 | P680356000 | SOP. MICRO DESEQUILIBRIO 120 | 1 | | |
| 19 | P543051000 | FINAL DE CARRERA VARILLA | 1 | | |
| 20 | P663013000 | RANURA MICRO DESEQUILIBRIO | 1 | | |
| 21 | P663010000 | CABLE MICRO DESEQUILIBRIO | 1 | | |

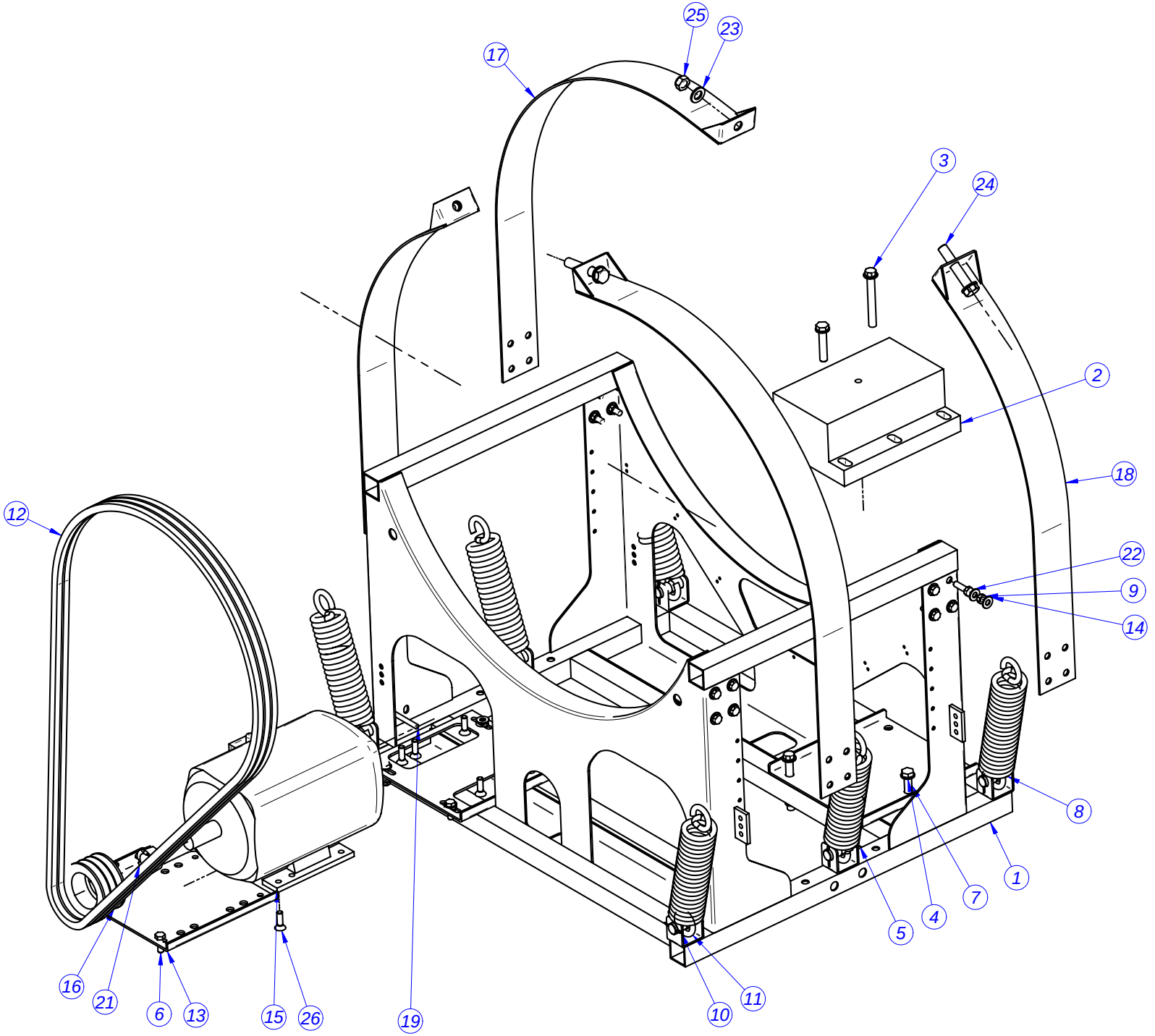
25
23
17
3
24
2
18
12
22
9
14
8
1
7
4
5
16
21
6
13
15
26
19
10
11

| MOD. | LAVADORA 120 | | ZONA | CUNA | |
|---|---|---|---|---|---|
| Nº | CODIGO | DENOMINACION | Cant. | | |
| 1 | P680221000 | CUNA COMPLETA 120 | 1 | | |
| 2 | P680201000 | CONTRAPESO MOTOR 120 | 1 | | |
| 3 | Q151592000 | TORN.EXA. M16x130 | 4 | | |
| 4 | Q232061000 | ARANDELA A16 DIN 125 | 12 | | |
| 5 | Q221347000 | TUERCA EXAG.AUTOBL.M.16 | 6 | | |
| 6 | Q151341000 | TOR.EX.M12X35 H.ZINCADO | 3 | | |
| 7 | Q151399000 | TORN. EXAG.M.16X80 DIN 933 | 2 | | |
| 8 | P680206000 | PASADOR MUELLE 120 | 6 | | |
| 9 | Q221307000 | TUE.EX.AUT.M12 H.ZINCADA | 22 | | |
| 10 | Q352017000 | PASADOR DE ALETAS 3 X 50 | 12 | | |
| 11 | P680203000 | MUELLE LF-120 | 6 | | |
| 12 | P685903000 | CORREA SPB 120 | 4 | | |
| 13 | P680227000 | PLACA SOPORTE MOTOR 120 | 1 | | |
| 14 | P680230000 | PLETINA MOTOR 120 | 2 | | |
| 15 | P685905000 | MOTOR 15KW | 1 | | |
| 16 | P685901000 | POLEA MOTOR SPB/B 140-4 | 1 | | |
| 17 | P680228000 | CINTA LARGA SOPORTE CUBA120 | 2 | | |
| 18 | P680229000 | CINTA CORTA SOPORTE CUBA 120 | 2 | | |
| 19 | Q011360000 | TORNILLO EXAGONAL M10X80 | 1 | | |
| 21 | P685902000 | TAPER BUSH MOTOR 2012-42 | 1 | | |
| 22 | Q011376000 | TOR.EX.M12X40 H.ZINCADO | 16 | | |
| 23 | Q231311000 | ARANDELA A21 | 4 | | |
| 24 | Q151302000 | TORNILLO EXAG.M.20x110 | 2 | | |
| 25 | Q221348000 | TUERCA EXAG.AUTOBL.M.20 | 2 | | |
| 26 | Q151595000 | TOR. AVELLANADO M12x40 | 6 | | |

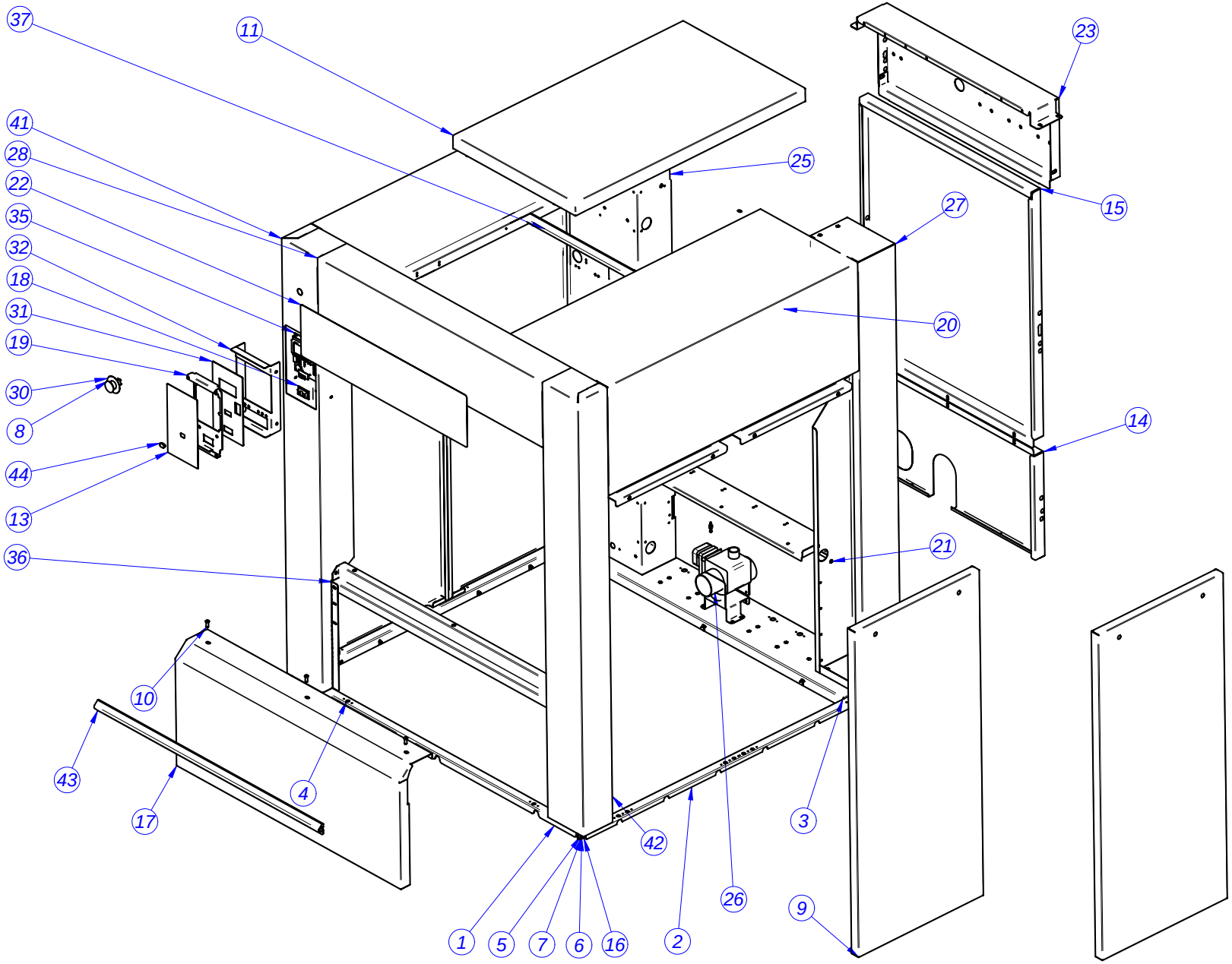
37
11
23
41
28
22
35
32
18
31
19
30
8
44
13
36
25
27
15
20
14
21
10
43
17
4
42
3
26
9
1
5
7
6
16
2

| MOD. | LAVADORA 120 | | ZONA | MUEBLE | |
|---|---|---|---|---|---|
| Nº | CODIGO | DENOMINACION | Cant. | | |
| 1 | P680326000 | LISTON ARMAZON ANT.120 | 1 | | |
| 2 | P680325000 | LISTON ARMAZON LAT.120 | 2 | | |
| 3 | P680324000 | LISTON ARMAZON POST.120 | 1 | | |
| 4 | Q151323000 | TORN.BROCA 4,8X16 | 16 | | |
| 5 | Q221344000 | REMACHE EXAGONAL M8 | 18 | | |
| 6 | Q232050000 | ARANDELA A8 | 6 | | |
| 7 | Q242050000 | ARAND.ABAN. A8 A.304 | 6 | | |
| 8 | Z513005000 | Interruptor de seta rojo | 1 | | |
| 9 | P680303000 | PANEL LATERAL INFERIOR 120 | 4 | | |
| 10 | Q152065000 | TOR. M8X20 ISO 7380 A2 | 3 | | |
| 11 | P680359000 | ENCIMERA 120 | 1 | | |
| 13 | P540427000 | ADHESIVO TECLAS 55 MP | 1 | | |
| 14 | P680304000 | PANEL VACIADO 120 | 1 | | |
| 15 | P680305000 | PANEL POST. INTERMEDIO 120 | 1 | | |
| 16 | Q012053000 | TORN.EXA. M8X20 A.304 | 6 | | |
| 17 | P680319000 | ZOCALO 120 | 1 | | |
| 18 | P623017000 | INTERRUPTOR GENERAL C.I. | 1 | | |
| 19 | P680367000 | PORTA PROGR COLUMNA V2 | 1 | | |
| 20 | P680357000 | PANEL LATERAL SUP. 120 | 2 | | |
| 21 | P680362000 | TRAVESAÑO POSTERIOR 120 | 1 | | |
| 22 | P540376000 | ADHESIVO PORTAMANDOS 55 | 1 | | |
| 23 | P680306000 | PANEL POST. VALVULAS 120 | 1 | | |
| 25 | P683054000 | CUADRO ELECTRICO 120 V2 | 1 | | |
| 26 | P682116000 | VALVULA 4" IZQUIERDA | 1 | | |
| 27 | P680309000 | COLUMNA POSTERIOR 120 | 1 | | |
| 28 | P680301000 | PORTAMANDOS 120 | 1 | | |
| 30 | Z513006000 | Etiqueta circular amarillo | 1 | | |
| 31 | P660345000 | PORTA ADHESIVO COLUMNA 60 | 1 | | |
| 32 | P680367000 | PORTA PROGR COLUMNA V2 | 1 | | |
| 34 | P680361000 | SOPORTE VARIADOR 120 | 1 | | |
| 35 | P643008000 | VISUALIZADOR GRAFICO MP | 1 | | |
| 36 | P680360000 | TRAVESAÑO ZOCALO 120 | 1 | | |
| 37 | P680358000 | TRAVESAÑO ENCIMERA 120 | 2 | | |
| 41 | P680307000 | COLUMNA ANTERIOR IZDA. 120 | 1 | | |
| 42 | P680308000 | COLUMNA ANTERIOR DCHA. 120 | 1 | | |
| 43 | P540370000 | PARACHOQUES | 1 | | |
| 44 | P6130140000 | TAPON PUERTO SERIE PROG | 1 | | |

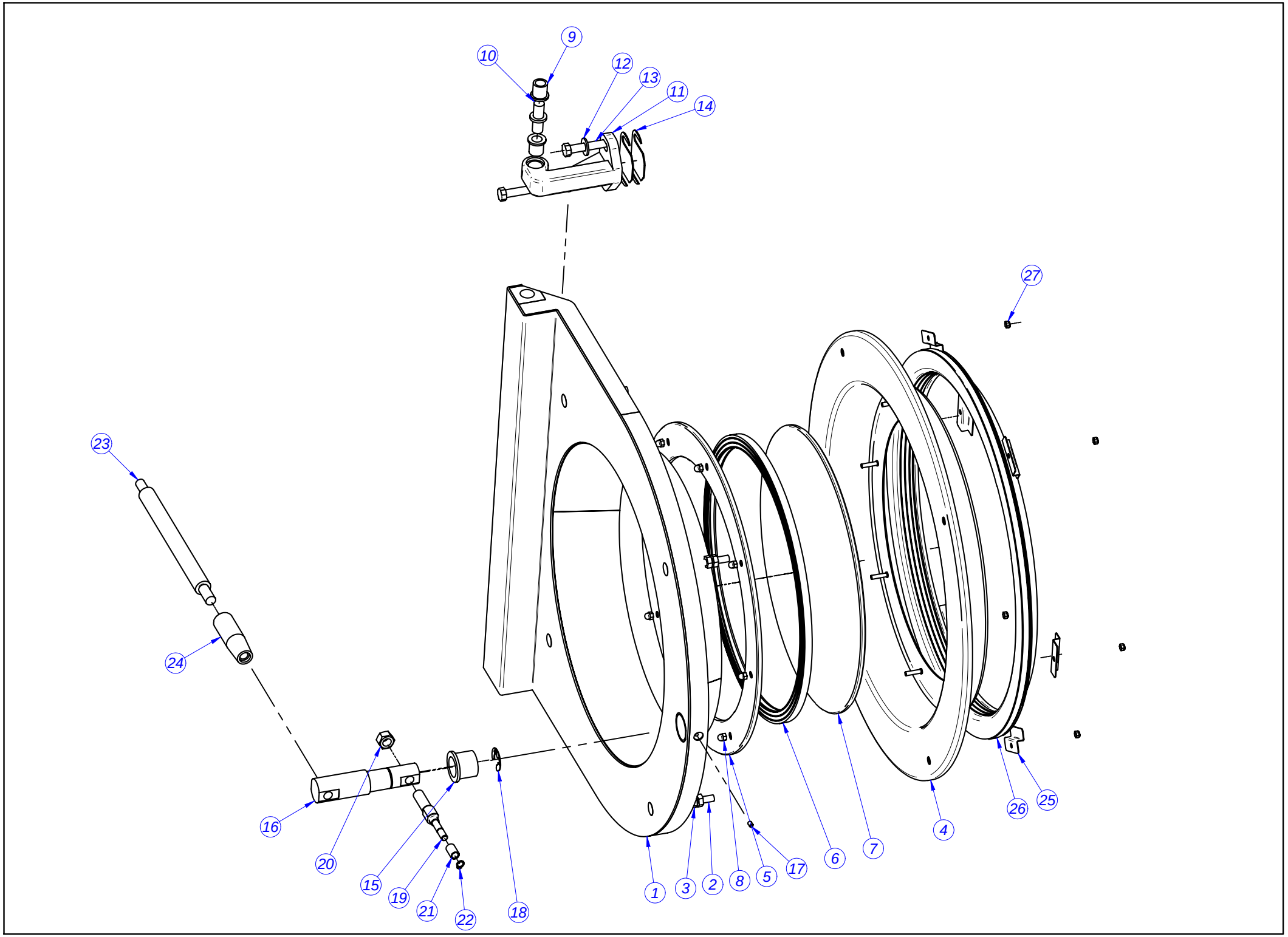
9
10
12
13
11
14
27
23
24
16
20
15
19
21
22
18
1
3
2
8
5
17
6
7
4
26
25

| MOD. | LAVADORA 120 | | ZONA | PUERTA | |
|---|---|---|---|---|---|
| Nº | CODIGO | DENOMINACION | Cant. | | |
| 1 | P680547000 | PUERTA COMPL. 120(2) | 1 | | |
| 2 | P680515000 | VARILLA ROSCADA PUERTA 120 | 4 | | |
| 3 | Q162066000 | TUERCA EXAGONAL M10 INOX. | 12 | | |
| 4 | P680506000 | PUERTA PISADOR COMPL. | 1 | | |
| 5 | P680504000 | PISADOR JUNTA PUERTA 120 | 1 | | |
| 6 | P680508000 | JUNTA CRISTAL 120 | 1 | | |
| 7 | P680505000 | CRISTAL PUERTA 120 | 1 | | |
| 8 | Q212040000 | TUER.SOMB.M6 | 8 | | |
| 9 | P680511000 | CASQUILLO "SELFOIL 16-22-25 | 4 | | |
| 10 | P680548000 | EJE BISAGRA | 2 | | |
| 11 | P680541000 | BISAGRA PUERTA (2) | 2 | | |
| 12 | Q301010000 | ARAND 27X12,5X2,5HIER | 4 | | |
| 13 | Q011376000 | TOR.EX.M12X40 H.ZINCADO | 4 | | |
| 14 | P660529000 | CALZO BISAGRA 60,40 | 4 | | |
| 15 | P680526000 | CASQUILLO SELFOIL DE VALONA | 1 | | |
| 16 | P660528000 | EJE PUERTA 40/60 | 1 | | |
| 17 | Q132041100 | VARILL. ROSC. EXTR. CON. M6X | 1 | | |
| 18 | Q272072000 | ARAND. SEG. A24 DIN6799 INOX | 1 | | |
| 19 | P660521000 | EJE LEVA PUERTA 60/40 | 1 | | |
| 20 | Q162090000 | TUER.EXA.M16 | 1 | | |
| 21 | P540516000 | CASQUILLO ENGANCHE | 1 | | |
| 22 | P660537000 | SUPLEMENTO EJE LEVA 40/60 | 1 | | |
| 23 | P680528000 | PALANCA LEVA 120 | 1 | | |
| 24 | P680531000 | MANGO PUERTA 120 | 1 | | |
| 25 | P680530000 | SOPORTE GOMA 120 | 6 | | |
| 26 | P680554000 | JUNTA PUERTA 120 | 1 | | |
| 27 | Q222012000 | TUER.AUTOB.M6 | 6 | | |
| 28 | P540519000 | SEPARADOR CRISTAL | 8 | | |
| 29 | P540520000 | PISADOR CRISTAL | 8 | | |

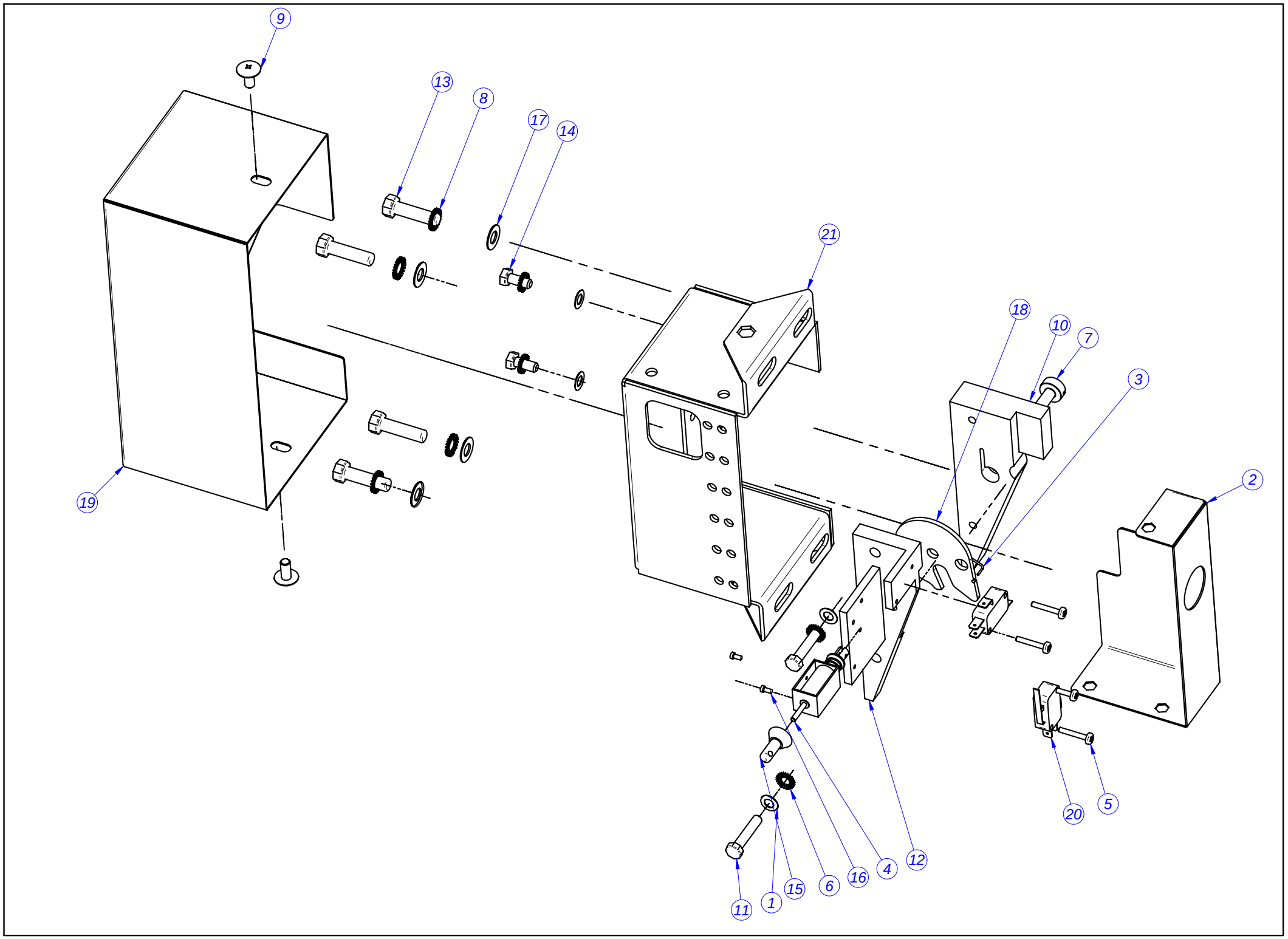
9
13
8
17
14
21
18
10
7
3
2
19
20
5
12
4
16
6
15
1
11

| MOD. | LAVADORA 120 | | ZONA | CIERRE P680550000 | |
|---|---|---|---|---|---|
| Nº | CODIGO | DENOMINACION | Cant. | | |
| 1 | Q232030000 | ARANDELA A5 | 4 | | |
| 2 | P680553000 | PROTECTOR CONEX CIERRE 120 | 1 | | |
| 3 | P620510000 | MUELLE CIERRE | 1 | | |
| 4 | P613002000 | ELECTROIMAN PUERTA | 1 | | |
| 5 | Q032013000 | TORN.ALOM.M3X20 | 4 | | |
| 6 | Q242040000 | ARAND.ABAN. A6 A.304 | 4 | | |
| 7 | P650506000 | EJE BLOQUEO 40,60,120 | 1 | | |
| 8 | Q242050000 | ARAND.ABAN. A8 A.304 | 4 | | |
| 9 | Q152017000 | TORN.AMAR.M6X13 A304 | 2 | | |
| 10 | P650503000 | LEBA CIERRE 40,60,120 | 1 | | |
| 11 | Q012045000 | TORN.EXA. M6X30 A.304 | 2 | | |
| 12 | P650502000 | BASE CIERRE 40,60,120 | 1 | | |
| 13 | Q012055000 | TORN.EXA. M8X30 A.304 | 4 | | |
| 14 | Q012042000 | TORN.EXA. M6X15 | 2 | | |
| 15 | P620529000 | DESBLOQUEO | 1 | | |
| 16 | Q151396000 | TORN. ALLEN M2.5x5 | 2 | | |
| 17 | Q232050000 | ARANDELA A8 | 4 | | |
| 18 | P650504000 | BLOQUEO CIERRE 40,60,120 | 1 | | |
| 19 | P680551000 | TAPA CIERRE 120 | 1 | | |
| 20 | P620526000 | INTERRUPTOR PUERTA PLANO | 2 | | |
| 21 | P680549000 | SOPORTE CIERRE 120 | 1 | | |
| 22 | P623010000 | Cableado Puerta | 1 | | |

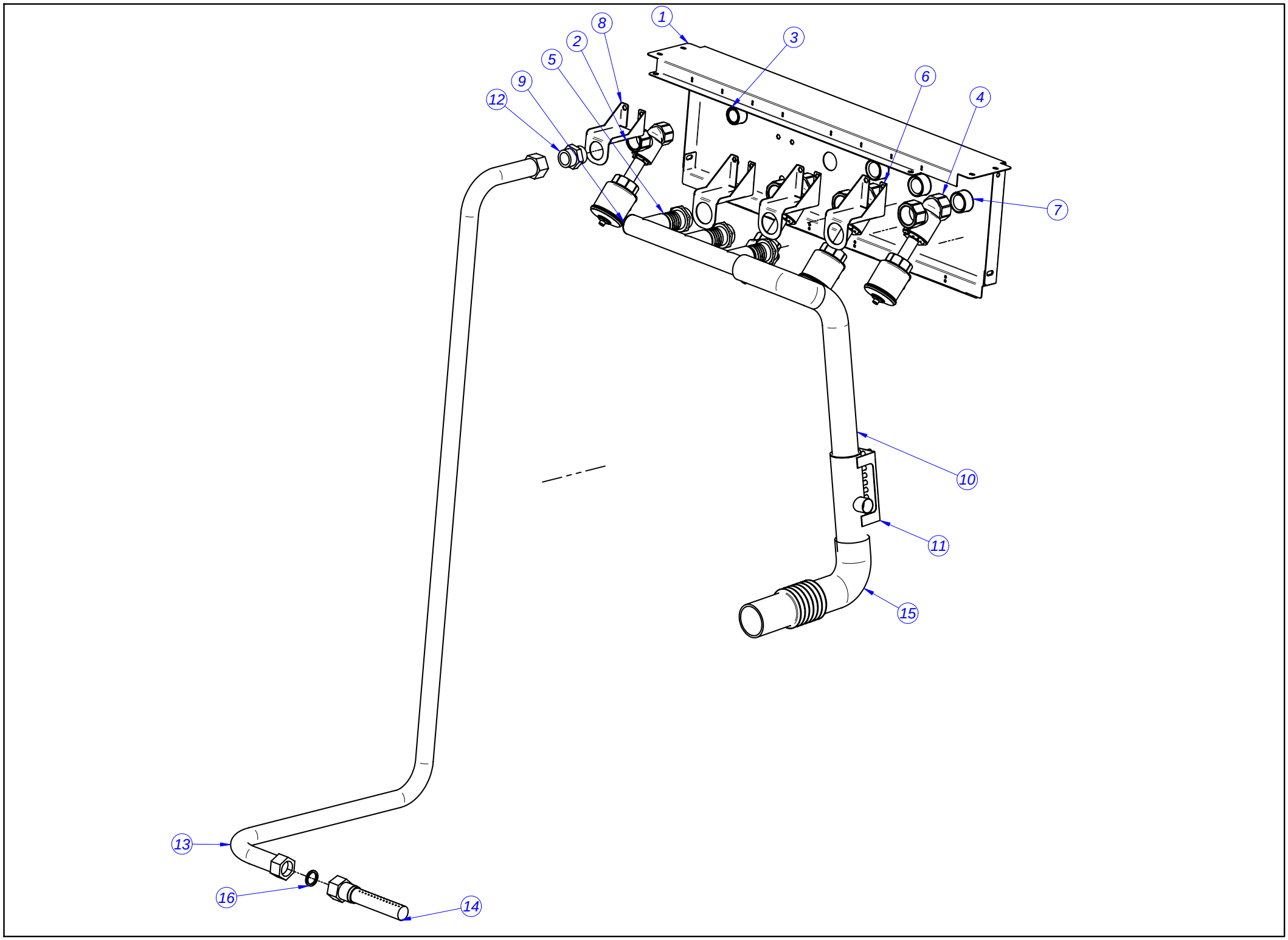
1
2
3
4
5
6
7
8
9
10
11
12
13
14
15
16

| MOD. | LAVADORA 120 | | ZONA | | |
|---|---|---|---|---|---|
| Nº | CODIGO | DENOMINACION | Cant. | | |
| 1 | P680306000 | PANEL POST. VALVULAS 120 | 1 | | |
| 2 | P685011000 | VALVULA VAPOR 1 1/4" | 1 | | |
| 3 | P666505000 | GM 2020 UNION GAS 11/4" 11/4 | 1 | | |
| 4 | P685040000 | VALVULA NEUMATICA 1" 1/2 | 3 | | |
| 5 | P685029000 | RACOR-MANGUERA 1"1/2 | 3 | | |
| 6 | P685030000 | SOPORTE VALVULA 1 1/2 | 3 | | |
| 7 | P685028000 | GM 2020 UNION GAS 11/2" 11/2 | 3 | | |
| 8 | P665010000 | SOPORTE VALVULA 1 1/4 | 1 | | |
| 9 | P685031000 | TUBO ENTRADAS DE AGUA 1 1/2 | 1 | | |
| 10 | P610703000 | CONDUCTO DESAGUE 8 | 1 | | |
| 11 | P685032000 | EMPALME DOSIFICADOR 120 | 1 | | |
| 12 | P685013000 | MANGUITO 1 1/4" | 1 | | |
| 13 | P685017000 | LATIGUILLO VAPOR 120KG. | 1 | | |
| 14 | P685015000 | INYECTOR VAPOR 120 COMPL. | 1 | | |
| 15 | P630701000 | CONDUCTO DOSIFICADOR CUBA 18 | 1 | | |
| 16 | P685016000 | ARANDELA TEFLON 38X30X4 | 2 | | |

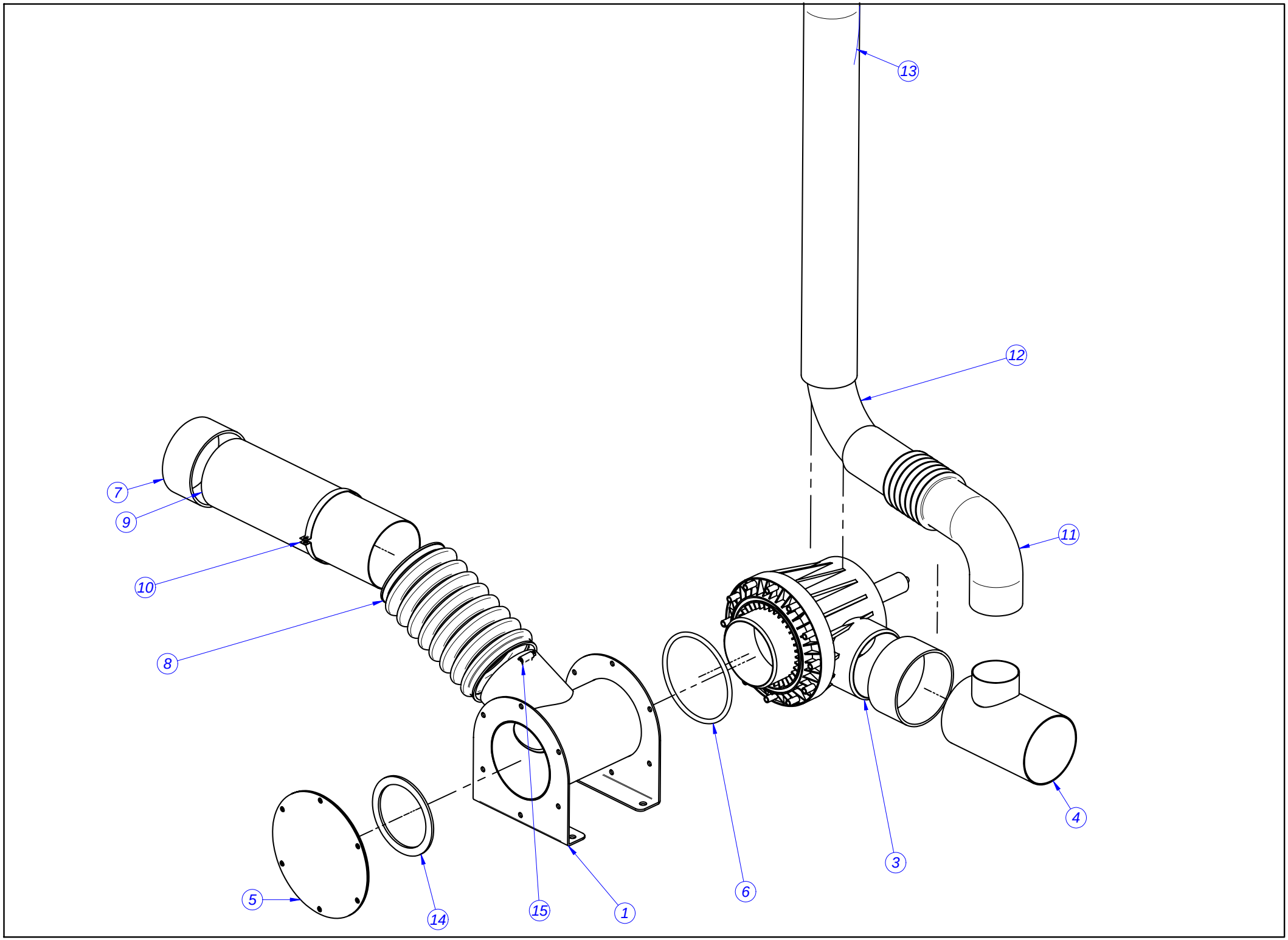
13
12
7
9
10
8
11
4
3
6
5
14
15
1

| MOD. | LAVADORA 120 | | ZONA | | |
|---|---|---|---|---|---|
| Nº | CODIGO | DENOMINACION | Cant. | | |
| 1 | P682115000 | T 4" 120 | 1 | | |
| 2 | P682117000 | VALVULA 4" DERECHA | 1 | | |
| 3 | P682116000 | VALVULA 4" IZQUIERDA | 1 | | |
| 4 | P682105000 | SALIDA DESAGUE 120 | 1 | | |
| 5 | P682125000 | TAPA DESAGUE 120 COMPLETO | 1 | | |
| 6 | P682127000 | JUNTA TORICA 2-434 142.24x7 | 1 | | |
| 7 | P682130000 | EMPALME 4" | 2 | | |
| 8 | P682104000 | FUELLE TUBO VACIADO 120 | 1 | | |
| 9 | P682128000 | CAÑA PVC DIAM.110 | 1 | | |
| 10 | P682129000 | ABRAZADERA TUBO PVC | 1 | | |
| 11 | P630701000 | CONDUCTO DOSIFICADOR CUBA 18 | 1 | | |
| 12 | T505012000 | CODO INOXIDABLE D73 d70 | 1 | | |
| 13 | P532120000 | CONDUCTO VACIADO LC-LF 25 | 1 | | |
| 14 | P626007000 | JUNTA CASQUILLO RETENES 13 | 1 | | |
| 15 | Q881337000 | ABRAZADERA 110-130 | 6 | | |

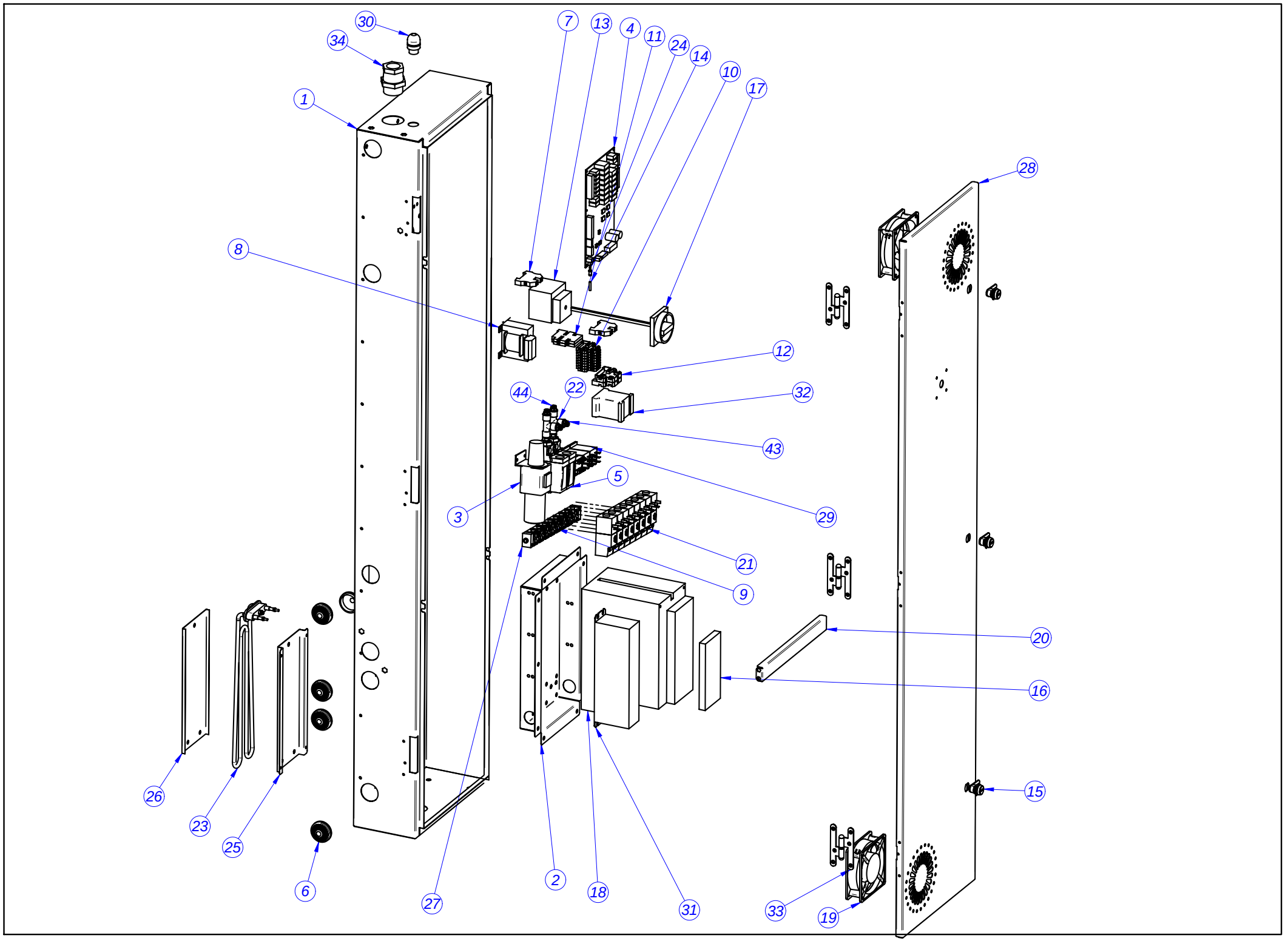
30
34
1
7
13
4
11
24
14
10
17
28
8
12
44
22
32
43
5
3
29
21
9
20
16
26
23
25
6
27
2
18
31
33
19
15

| MOD. | LAVADORA 120 | | ZONA | | |
|---|---|---|---|---|---|
| Nº | CODIGO | DENOMINACION | Cant. | | |
| 1 | P683054000 | CUADRO ELECTRICO 120 V2 | 1 | | |
| 2 | P680361000 | SOPORTE VARIADOR 120 | 1 | | |
| 3 | P683004000 | FILTRO REGULADOR DE AIRE | 1 | | |
| 4 | P613005000 | PLACA ENTRADAS-SALIDAS | 1 | | |
| 5 | P683042000 | PRESOSTATO SEG. BASCULACION | 2 | | |
| 6 | N103013000 | PASA CABLES | 13 | | |
| 7 | P453026000 | BORNE TIER 10 WPE-10103.O | 2 | | |
| 8 | P623028000 | TRANSFORMADOR 0-20-0-230 | 1 | | |
| 9 | P683047000 | BASE ACOPLABLE TUBO 4mm | 8 | | |
| 10 | P623006000 | REGLETA BORNAJE 2 PISOS | 8 | | |
| 11 | R073005000 | BORNAS PORTA FUSIBLES | 2 | | |
| 12 | Z263303000 | TOPE FINAL | 2 | | |
| 13 | P683039000 | SECCIONADOR 63A(VERSION 400V) | 1 | | |
| 14 | 3721910000 | TUBO CRISTAL 4 | 1 | | |
| 15 | P620351000 | CERRADURA 0185 | 3 | | |
| 16 | P663009000 | DISPLAY KEB 00.75.060-1000 | 0 | | |
| 18 | P683001000 | VARIADOR 18.5 KW KEB | 1 | | |
| 19 | Z103066000 | VENTILADOR 230V.50-60HZ | 2 | | |
| 20 | P680339000 | NERVIO CUADRO ELECTRICO 120 | 1 | | |
| 21 | P683048000 | EV. SERIE 192 3/2 | 8 | | |
| 22 | P683043000 | RACOR T HEMBRA 1/4 | 2 | | |
| 23 | Z203601000 | RESISTENCIA TANQUE | 1 | | |
| 24 | P613021000 | REDUCCION PRESOSTATO | 1 | | |
| 25 | P683010000 | BASE RESISTENCIA VARIADOR | 1 | | |
| 26 | P683011000 | TAPA RESIST. VARIADOR | 1 | | |
| 27 | P683050000 | LOTE EXTREMOS 6MM 3530071 | 1 | | |
| 28 | P680368000 | PUERTA CUADRO 120 V2 | 1 | | |
| 29 | Z683087000 | CONTACTOR 3TF20 01-3AL2 230 | 3 | | |
| 30 | R033002000 | PRENSA ESTOPAS | 1 | | |
| 31 | P683009000 | FILTRO 120-15.E4.T60-3A01) | 0 | | |
| 32 | Z203050000 | CONTAC. SIRUS 3R 230V 50-60 | 1 | | |
| 33 | P680328000 | BISAGRA | 3 | | |
| 34 | R143010000 | PRENSA ESTOPA PG-36 | 1 | | |
| 35 | P643018000 | Cable de ventilador | 1 | | |
| 36 | P683055000 | Instalacion Electrica Lav 120 | 1 | | |
| 37 | P683046000 | CABLEADO MOTOR 120 | 1 | | |
| 38 | P683056000 | cableado basculacion 40,60,120 | 1 | | |
| 39 | P184011000 | CARTUCHO FUSIBLE 4.A | 2 | | |
| 40 | P643005000 | Ptc+Puente rectificador Electr | 1 | | |
| 41 | P643018000 | Cable de ventilador | 2 | | |
| 42 | P683027000 | CABLEADO PROG. - TECLADO 120Kg | 1 | | |

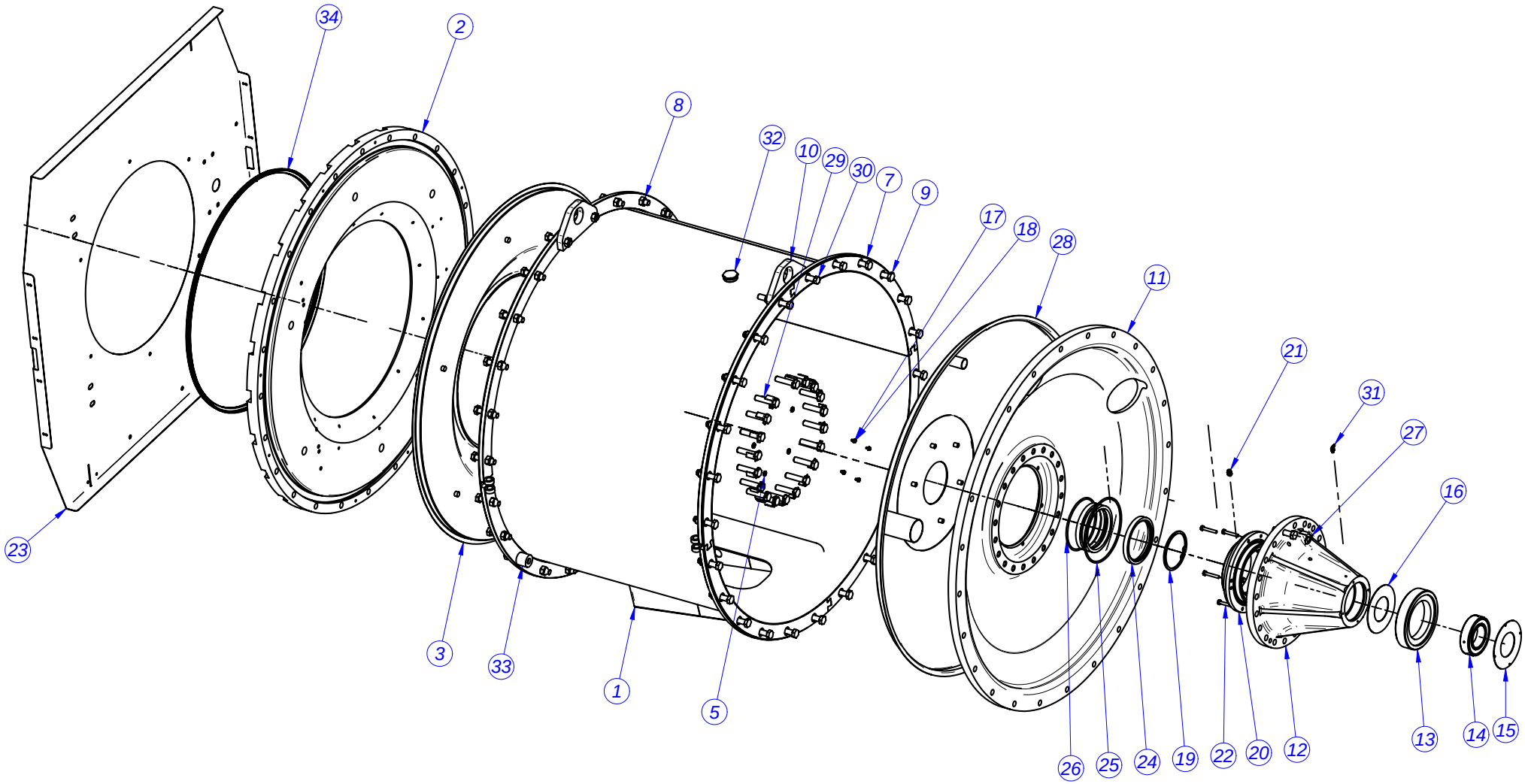
34
2
8
32
10
29
30
7
9
17
18
28
11
21
31
27
16
23
3
33
1
5
26
25
24
19
22
20
12
13
14
15

| MOD. | LAVADORA 120 | | ZONA | CUBA | |
|---|---|---|---|---|---|
| Nº | CODIGO | DENOMINACION | Cant. | | |
| 1 | P686027000 | CUBA COMPL. 120 | 1 | | |
| 2 | P686011000 | CONTRAPESO ANTERIOR 120 | 1 | | |
| 3 | P686014000 | FRENTE CUBA 120 COMPL. | 1 | | |
| 4 | Q232050000 | ARANDELA A8 | 6 | | |
| 5 | Q242050000 | ARAND.ABAN. A8 A.304 | 12 | | |
| 6 | Q012056000 | TOR.EX.M8X40 | 6 | | |
| 7 | P686010000 | ANILLO CUBA 120 COMPL. | 4 | | |
| 8 | Q221347000 | TUERCA EXAG.AUTOBL.M.16 | 50 | | |
| 9 | Q011399000 | TORNILLO EXAG.M.16X70 | 67 | | |
| 10 | P666015000 | GANCHO CUBA 60 | 2 | | |
| 11 | P686002000 | SOPORTE FONDO CUBA 120 | 1 | | |
| 12 | P686005000 | SOPORTE RODAMIENTOS 120 | 1 | | |
| 13 | P686017000 | RODAMIENTO 140/300/62 | 1 | | |
| 14 | P686034000 | ROD. 120 A ROTULA CON MANGUI | 1 | | |
| 15 | P686111000 | TAPA SOP. RODAMIENTOS 120 | 1 | | |
| 16 | P686040000 | JUNTA TAPA RODAMIENTOS 120 | 1 | | |
| 17 | Q242030000 | ARAND.ABAN. A5 A.304 | 4 | | |
| 18 | Q012031000 | TORN.EXA. M5X10 A.304 | 4 | | |
| 19 | P686022000 | ANILLO SEGURIDAD 180 DIN 472 | 1 | | |
| 20 | P686102000 | CASQUILLO RETENES 120 | 1 | | |
| 21 | P683017000 | ENCHUFE RAP. M5- DIAM. 4 | 1 | | |
| 22 | Q012057000 | TORN. EXAG. M8X50 AISI 304 | 5 | | |
| 23 | P680338000 | PANEL FRONTAL 120 | 1 | | |
| 24 | P686021000 | RETEN BAUMX7 180/210/15 | 2 | | |
| 24 | P686035000 | RETEN RADIAL BAUMX7 VITON | 1 | | |
| 25 | P686109000 | JUNTA TORICA 315 X 6 | 1 | | |
| 26 | P686110000 | JUNTA TORICA 224 X 6 | 1 | | |
| 27 | P686032000 | ARANDELA SEGURIDAD M16 | 20 | | |
| 28 | P686103000 | FONDO CUBA 120 COMPL. | 1 | | |
| 29 | Q012055000 | TORN.EXA. M8X30 A.304 | 1 | | |
| 30 | Q151002000 | TORN.EXA. M16x110 DIN 931 | 2 | | |
| 31 | P686029000 | ENGRASADOR SOP. ROD. | 1 | | |
| 32 | T305052000 | TAPÓN DESAGÜE | 1 | | |
| 33 | P666018000 | CASQUILLO POSICION CUBA 60 | 2 | | |
| 34 | P636108000 | JUNTA CUBA 18 | 1 | | |
| 35 | 3723100000 | PERFIL JUNTA CUBA 120/60/40 | 5 | | |
| 36 | P666020000 | GRASA RODAMIENTOS | 1 | | |
| 37 | 3723400000 | TUBO NEUM.4x2.5 | 1 | | |

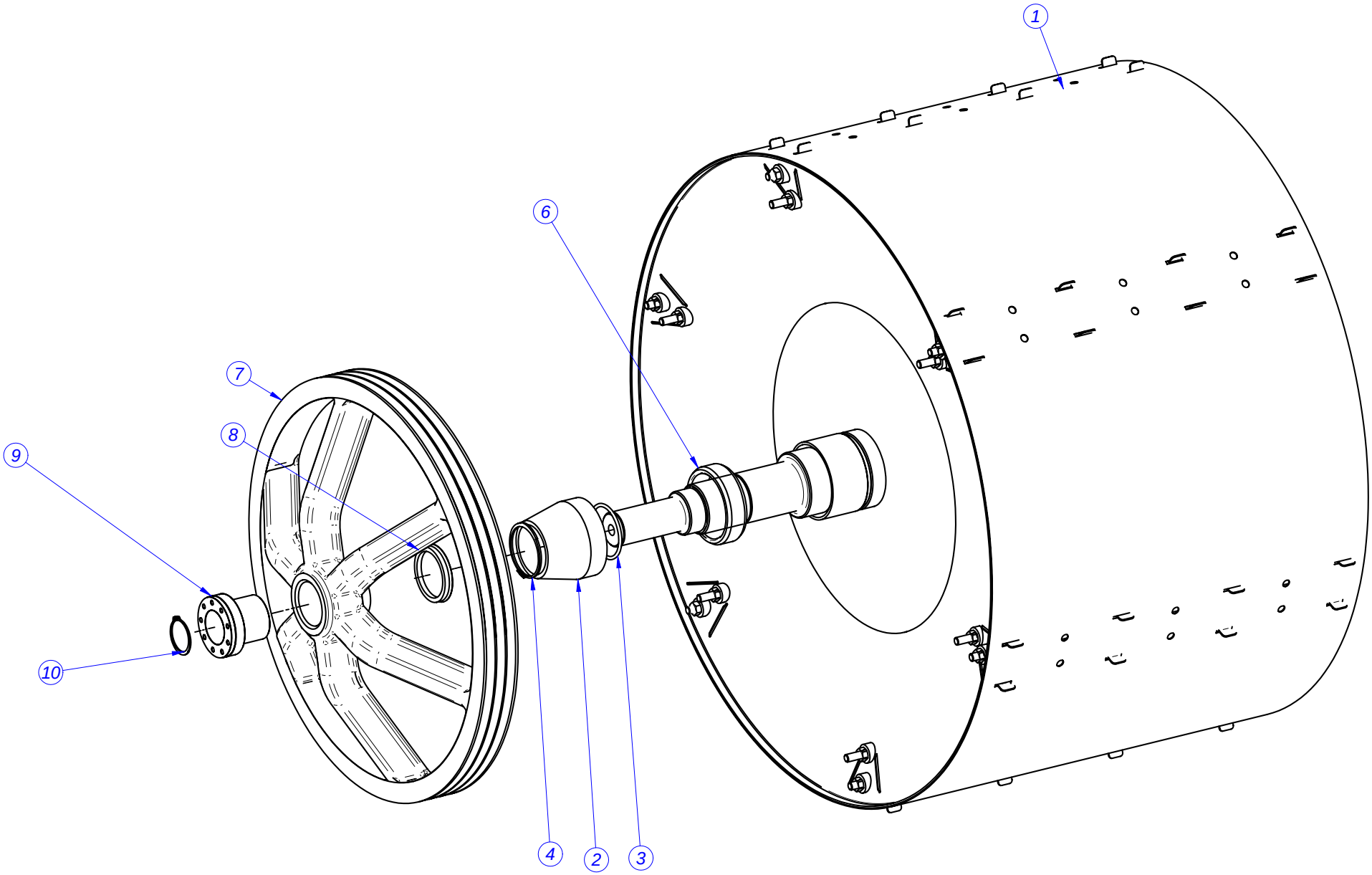
1
6
7
8
9
10
4
2
3

| MOD. | LAVADORA 120 | | ZONA | TAMBOR | |
|---|---|---|---|---|---|
| Nº | CODIGO | DENOMINACION | Cant. | | |
| 1 | P684907000 | TAMBOR 120 COMPLETO | 1 | | |
| 2 | P684905000 | GUIA RODAMIENTO 120 | 1 | | |
| 3 | P664910000 | JUNTA TORICA DIAM. INT 105X5 | 1 | | |
| 4 | P684916000 | ANILLO SEGURIDAD 105 DIN 471 | 1 | | |
| 6 | P686017000 | RODAMIENTO 140/300/62 | 1 | | |
| 7 | P686006000 | POLEA TAMBOR 120 | 1 | | |
| 8 | P644916000 | RETEN V-RING VA 100 | 1 | | |
| 9 | P686033000 | BUJE DE FIJACION 120 | 1 | | |
| 10 | P654915000 | ANILLO SEGURIDAD 65 | 1 | | |