DESPIECE TECNICO

Hornos Mixtos
Fours Mixtes
Combi Ovens
HeiBluftdämpfer
Forno Misti

SERIE EVOLUTION

Modelos:

HEP-10/21

Enero 2007 January

Fagor Industrial

HEP 10/21

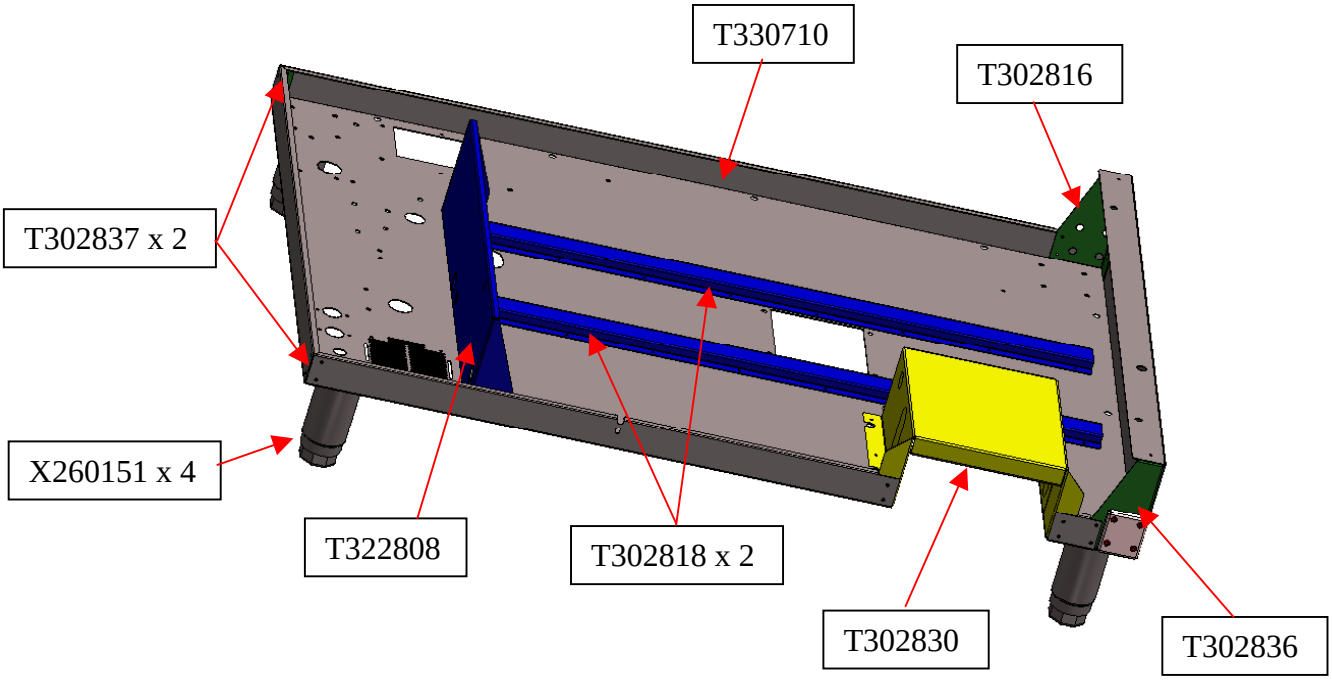
T330710
T302816
T302837 x 2
X260151 x 4
T322808
T302818 x 2
T302830
T302836

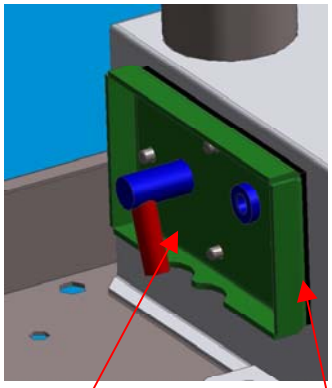
T325075
T325066

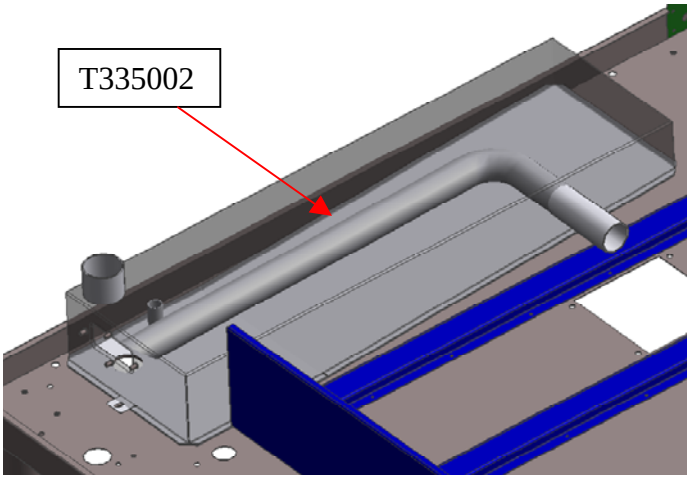
T335002

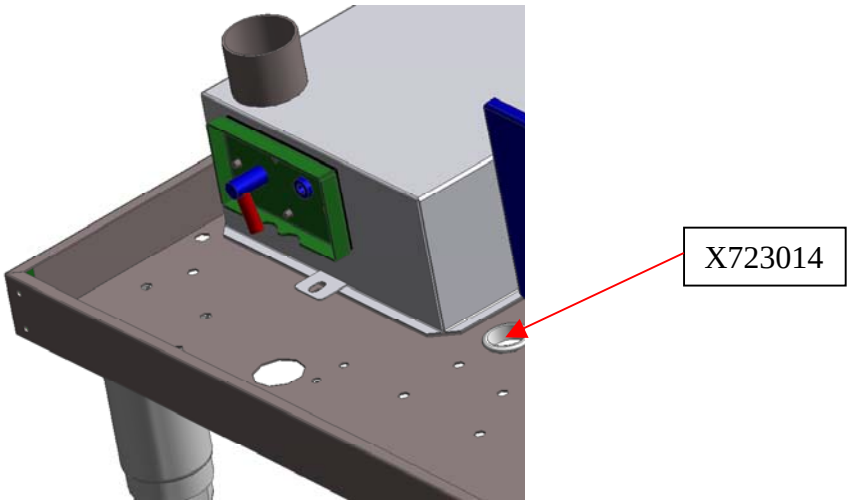
X723014

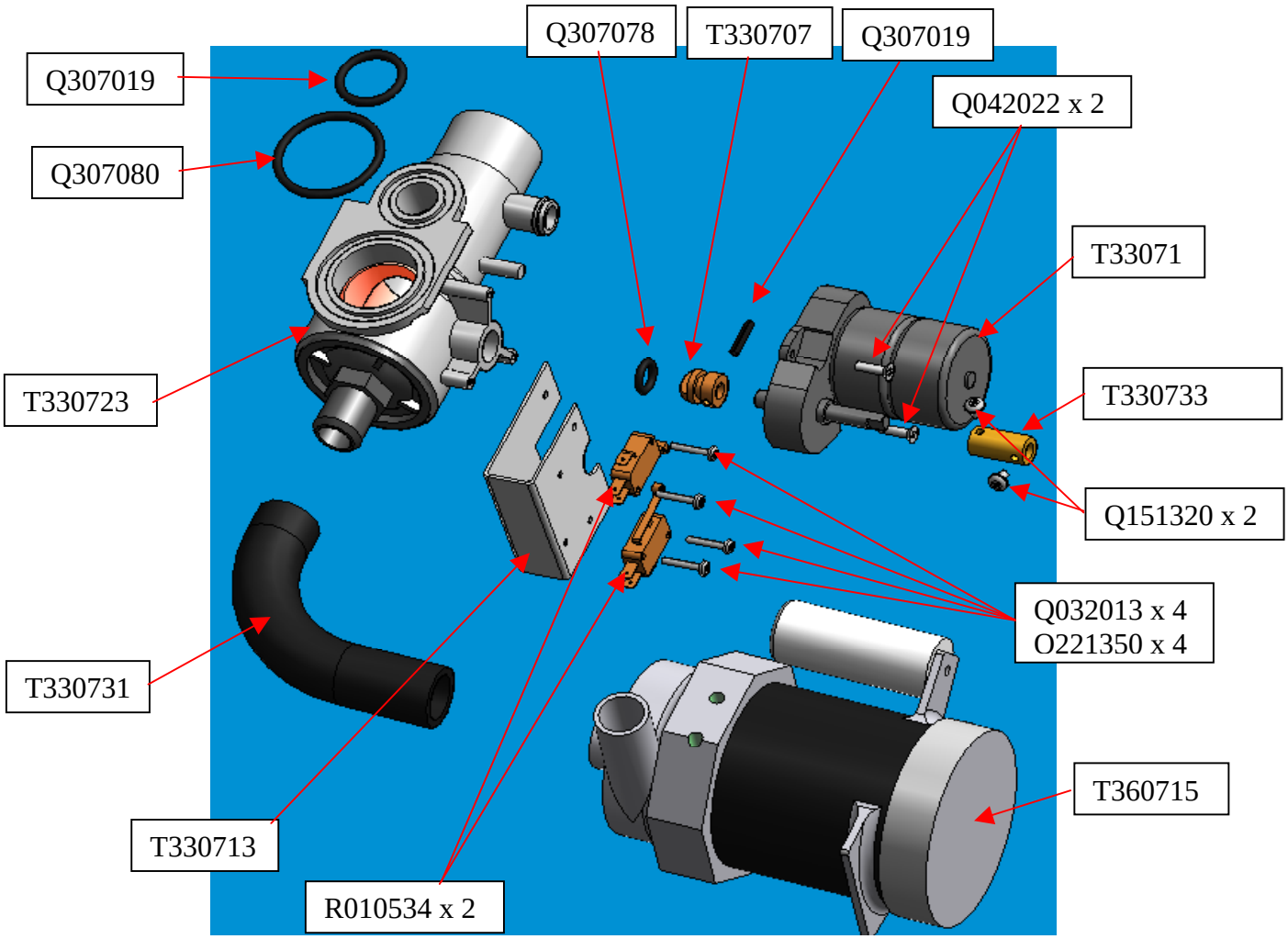

HEP wiring washing system
T333009

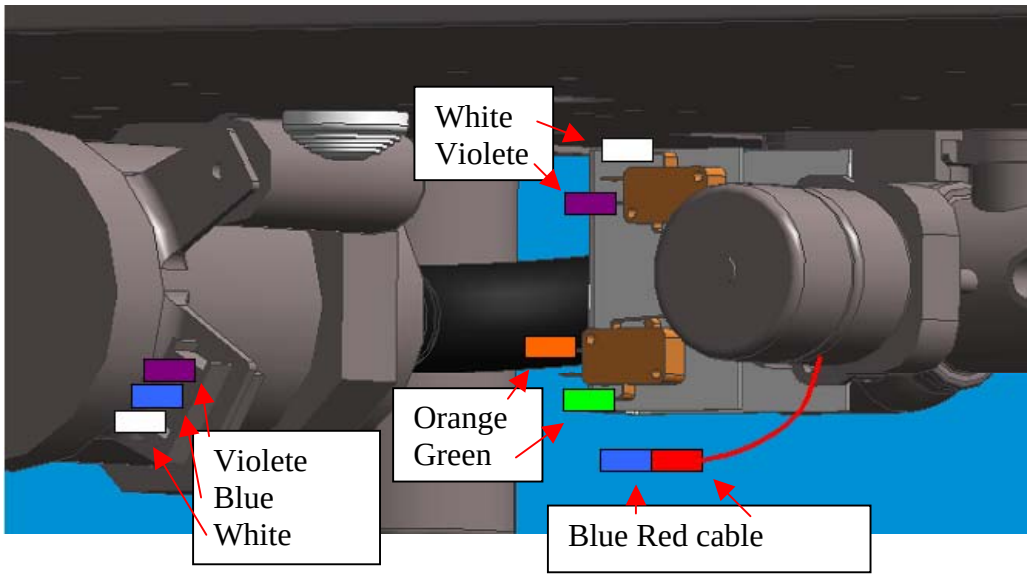

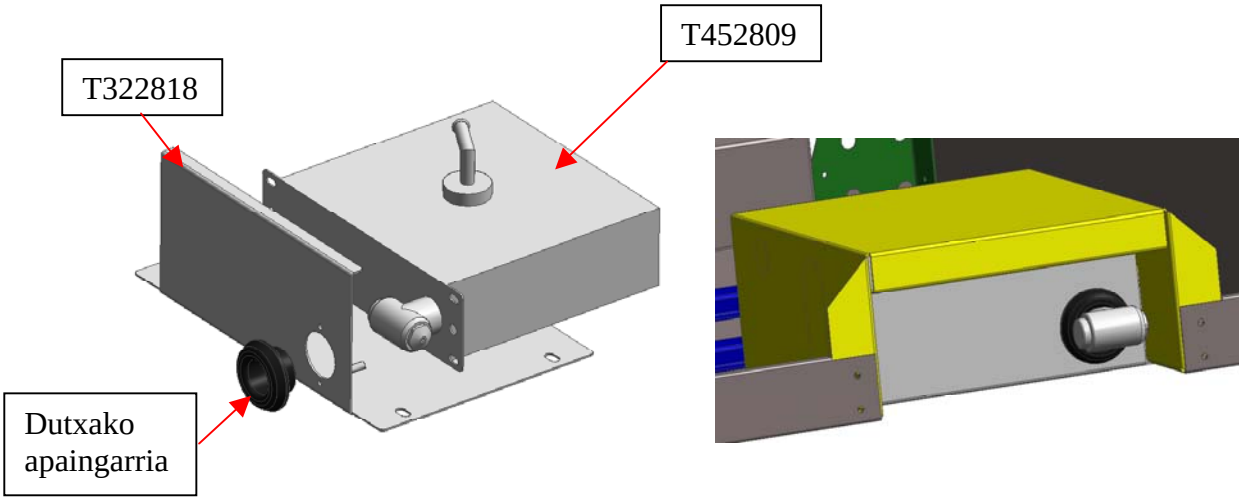
T322818
T452809
Dutxako
apaingarria

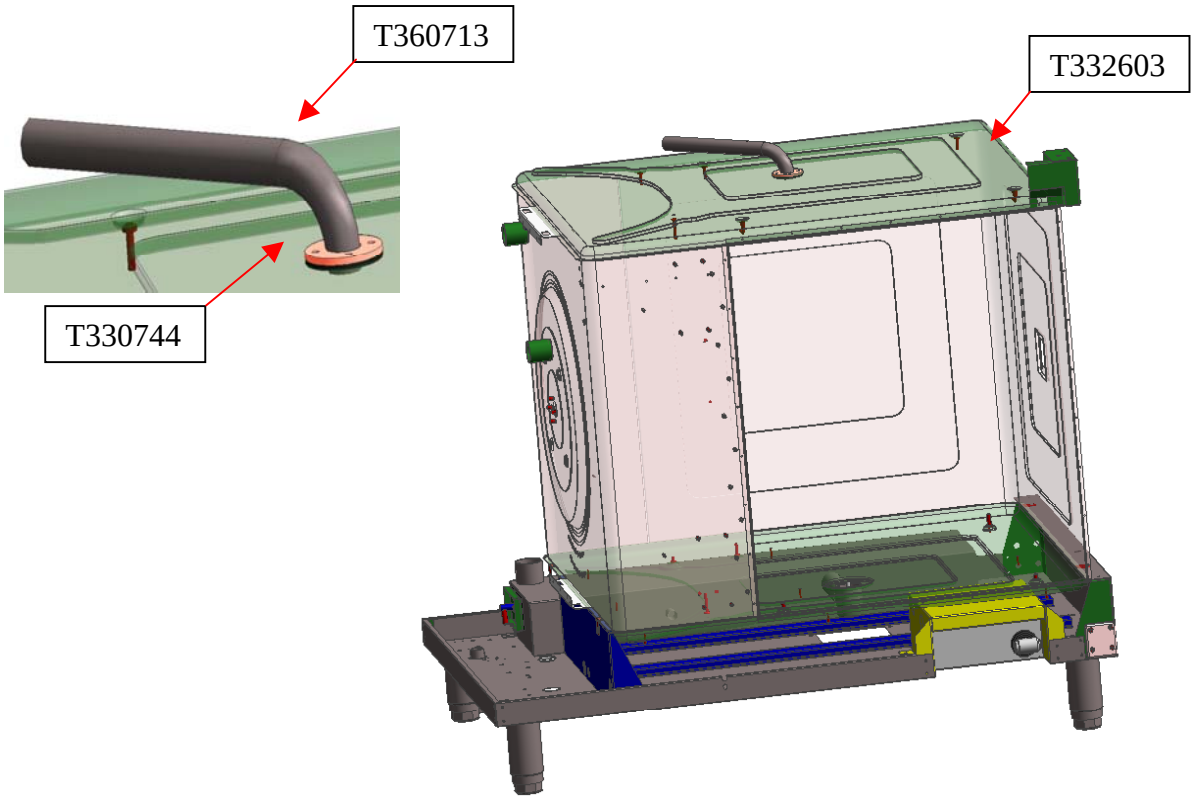
T360713
T332603
T330744

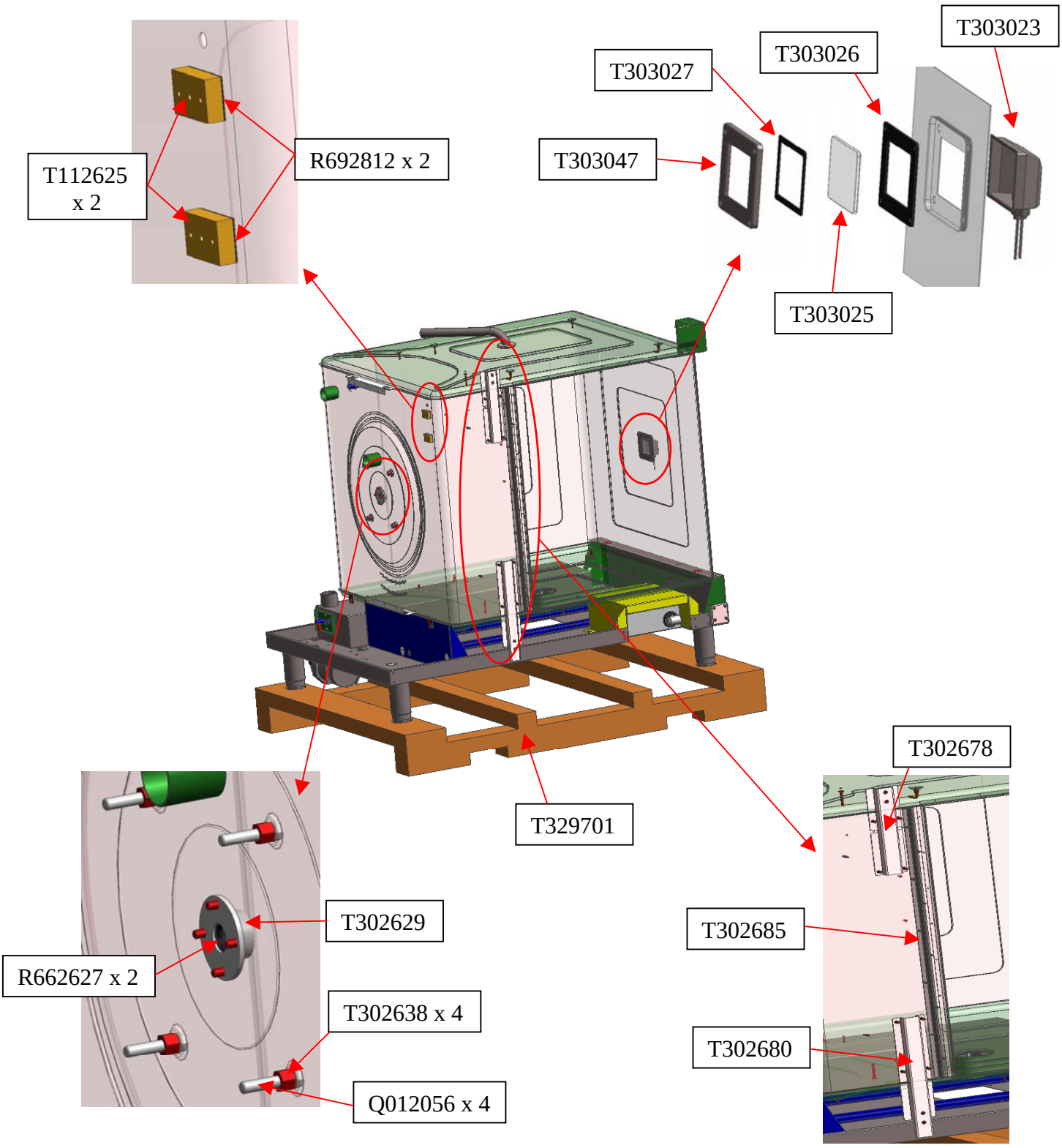
T303023
T303026
T303027
T303047
R692812 x 2
T112625
x 2
T303025
T329701
T302678
T302629
T302685
R662627 x 2
T302638 x 4
T302680
Q012056 x 4

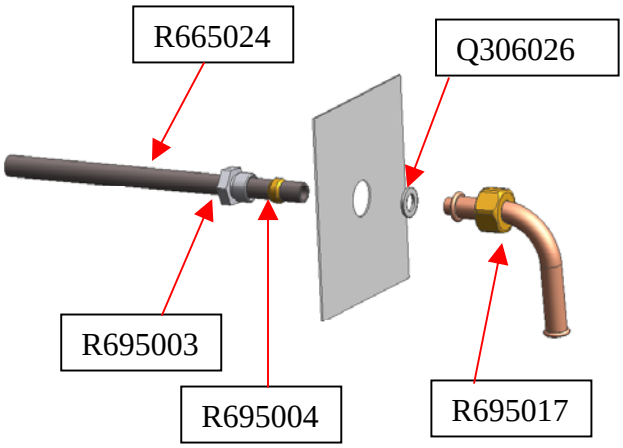
R665024
Q306026
R695003
R695004
R695017

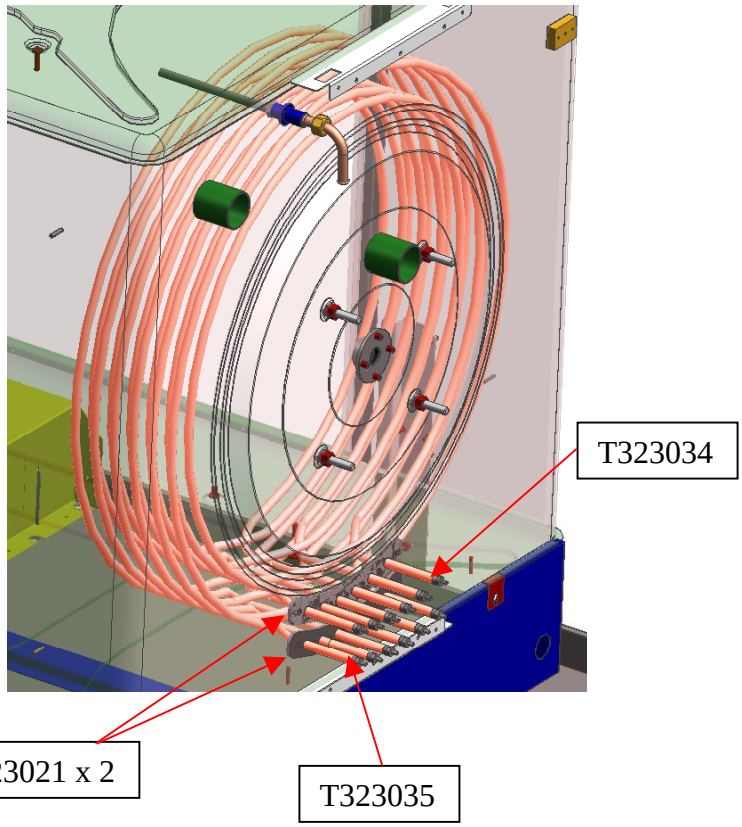
T323034
T323021 x 2
T323035

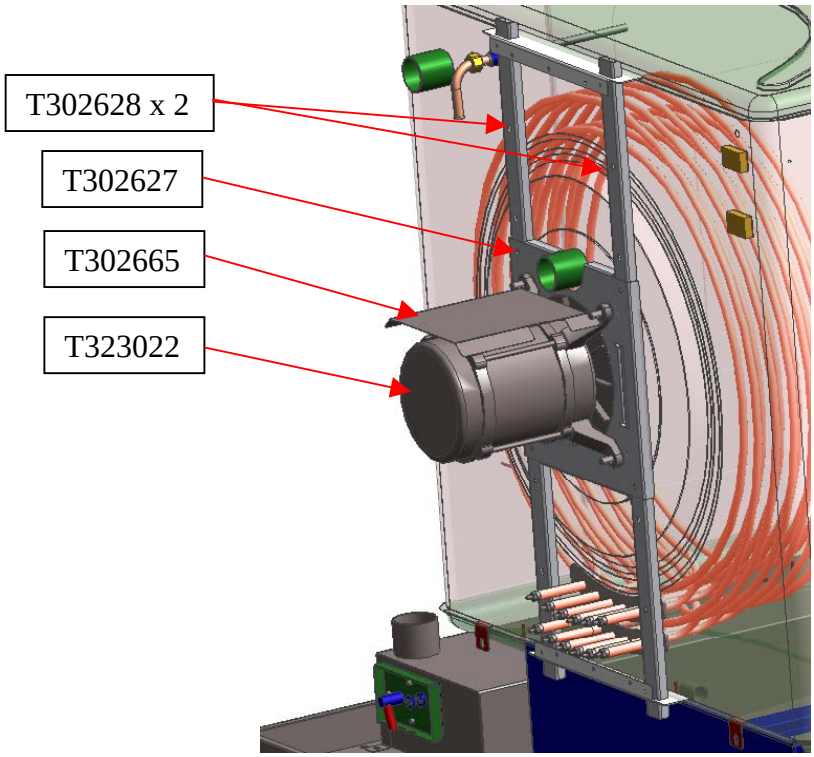
T302628 x 2
T302627
T302665
T323022

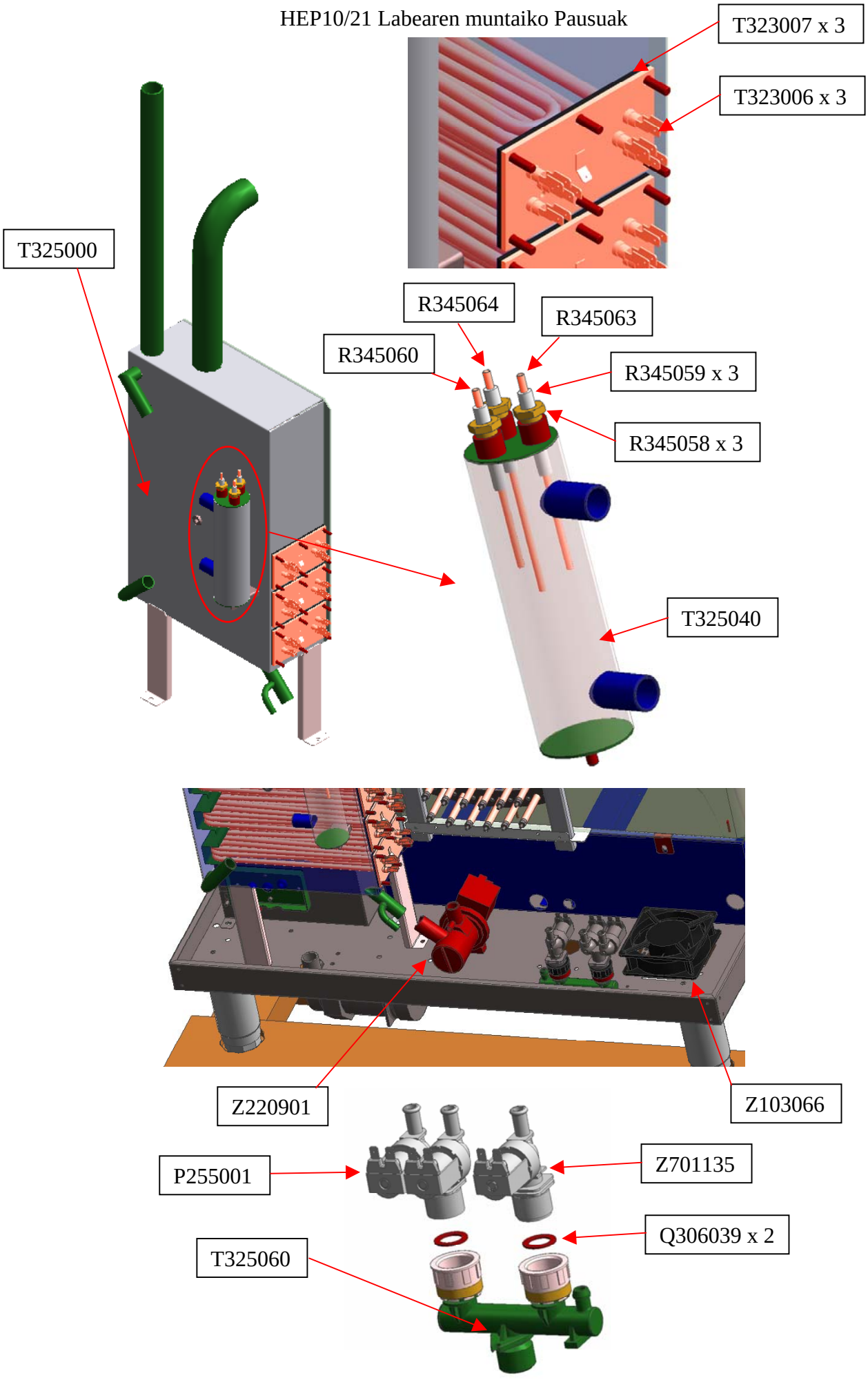
T323007 x 3
T323006 x 3
T325000
R345064
R345063
R345060
R345059 x 3
R345058 x 3
T325040
Z220901
Z103066
P255001
Z701135
Q306039 x 2
T325060

HEP 10/21 Control panel

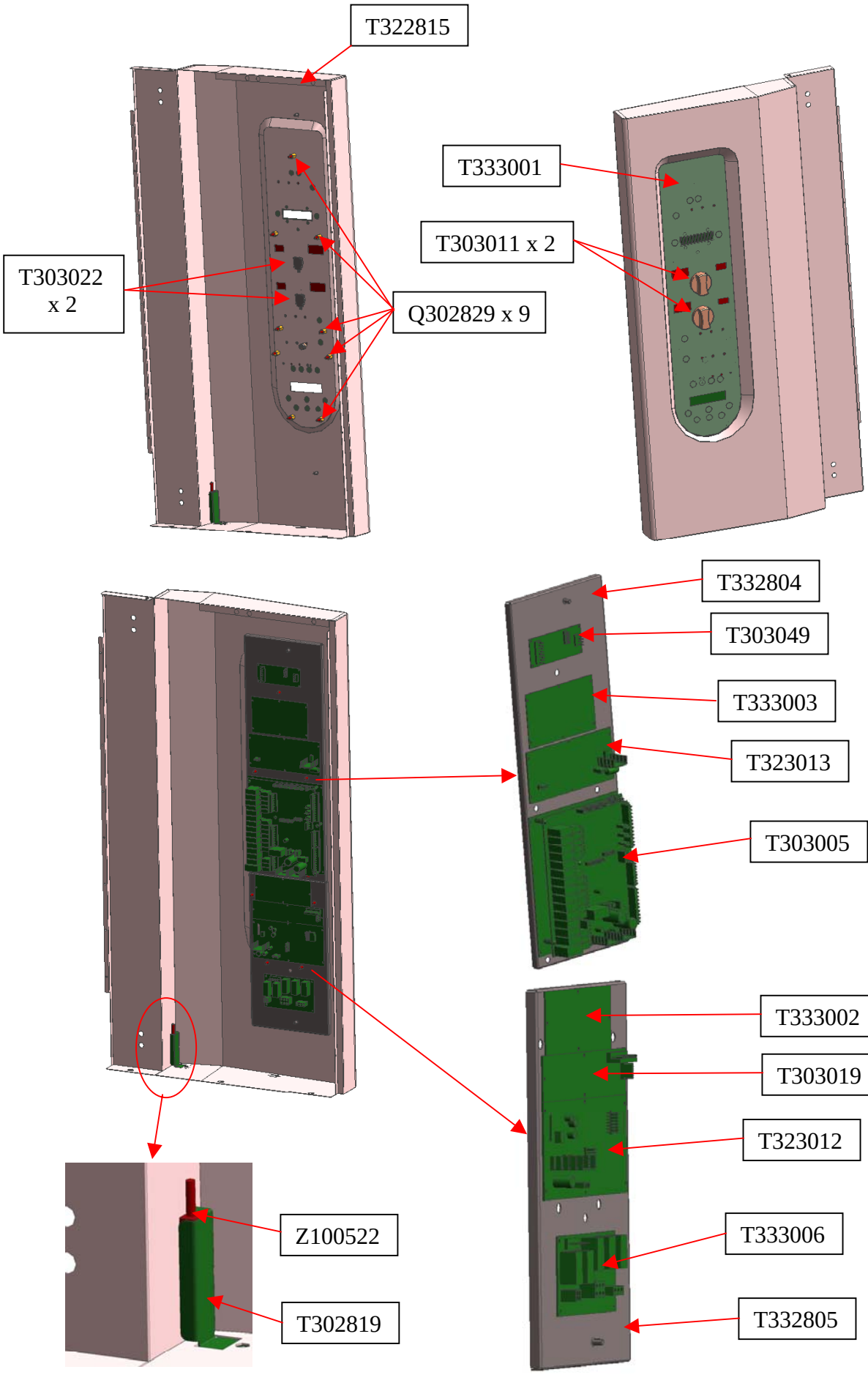

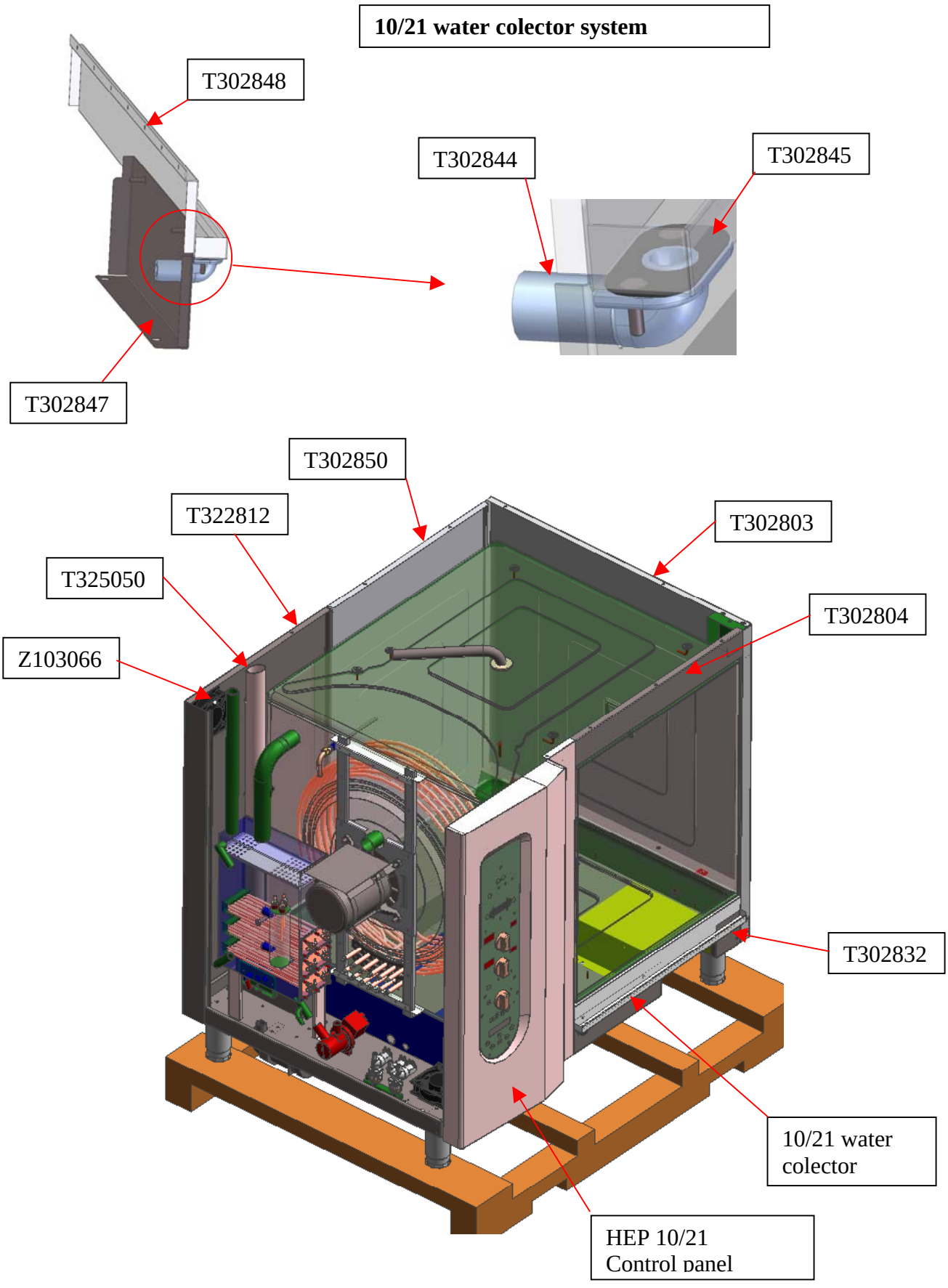
10/21 water colector system
T302848
T302844
T302845
T302847
T302850
T322812
T302803
T325050
T302804
Z103066
T302832
10/21 water colector
HEP 10/21 Control panel

HEP 10/21 Chimney

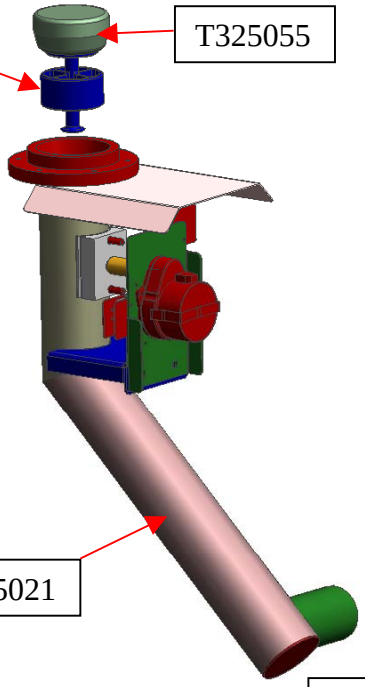

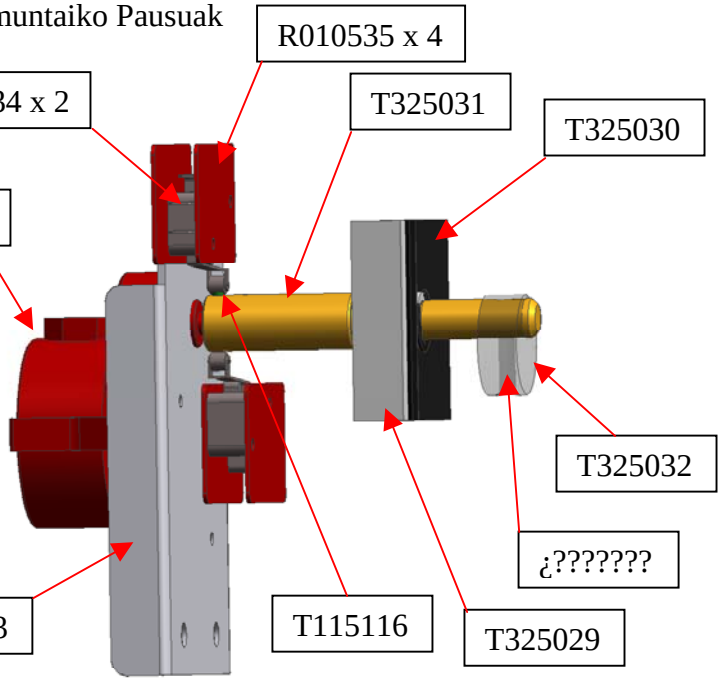

10/21 HEP Electric panel

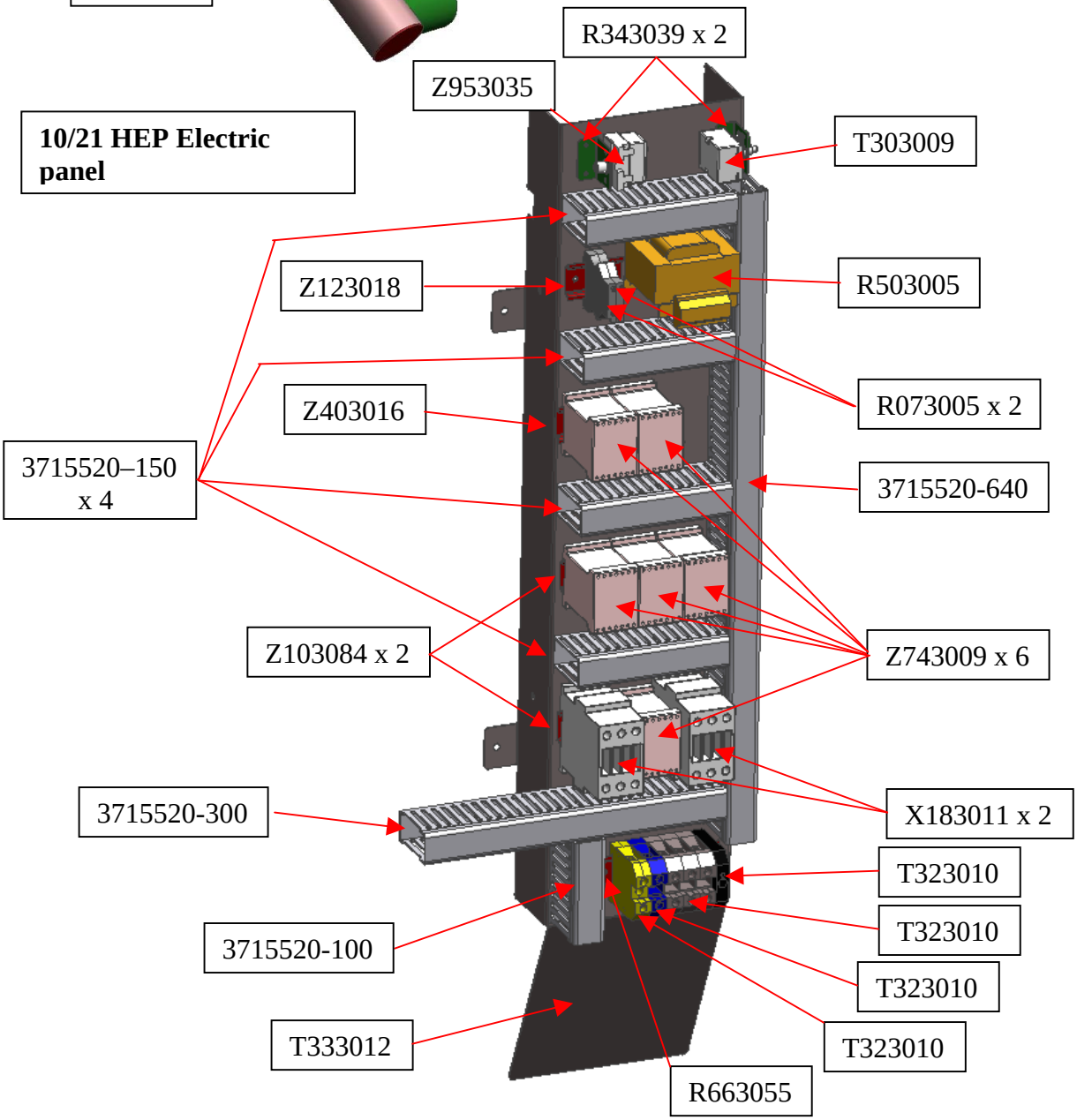

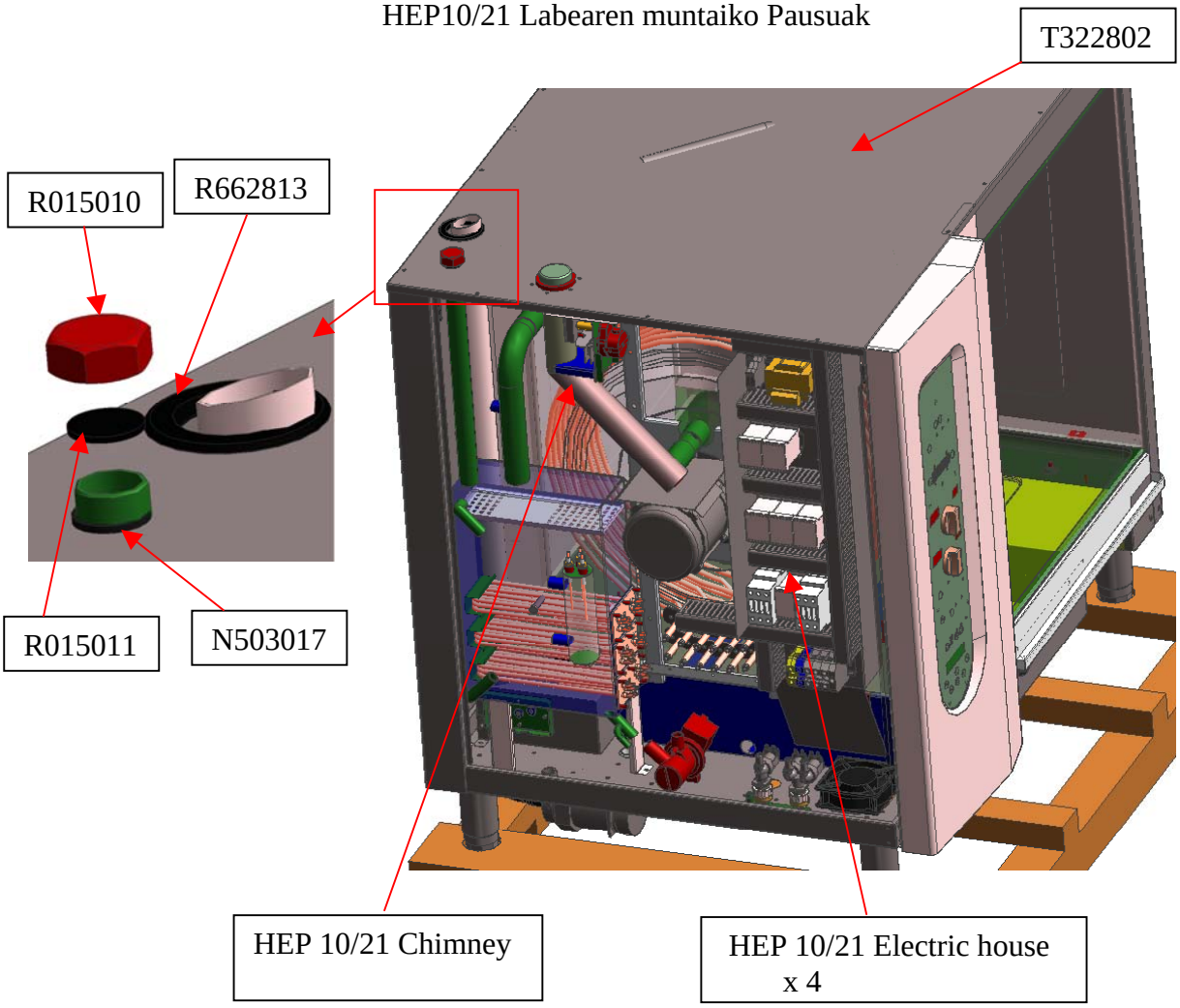
T322802
R015010
R662813
R015011
N503017
HEP 10/21 Chimney
HEP 10/21 Electric house
x 4

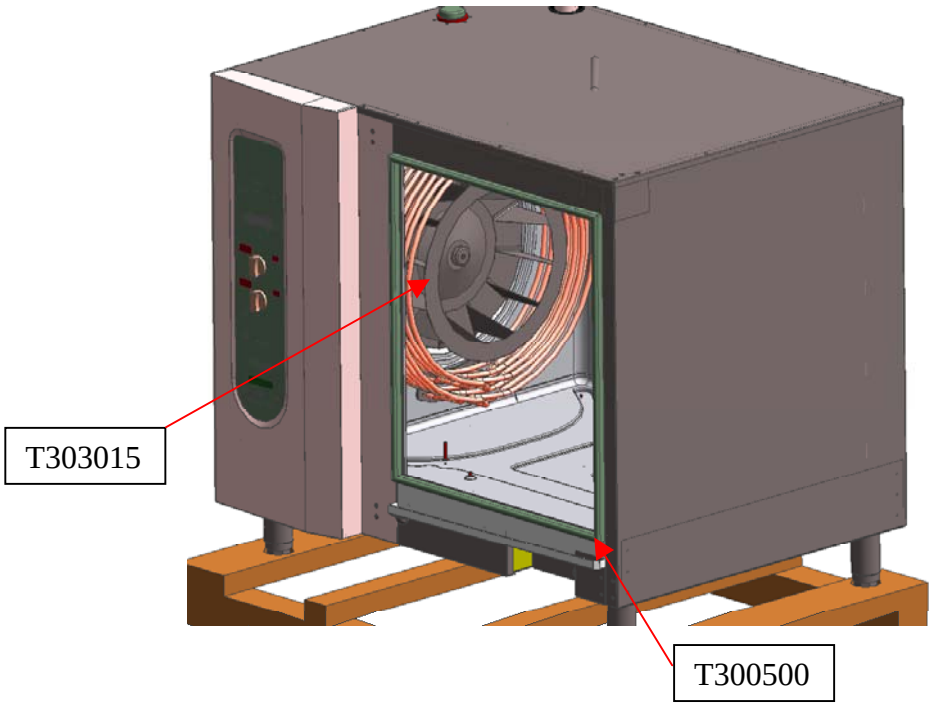
T303015
T300500

10/21 Electric fan cover

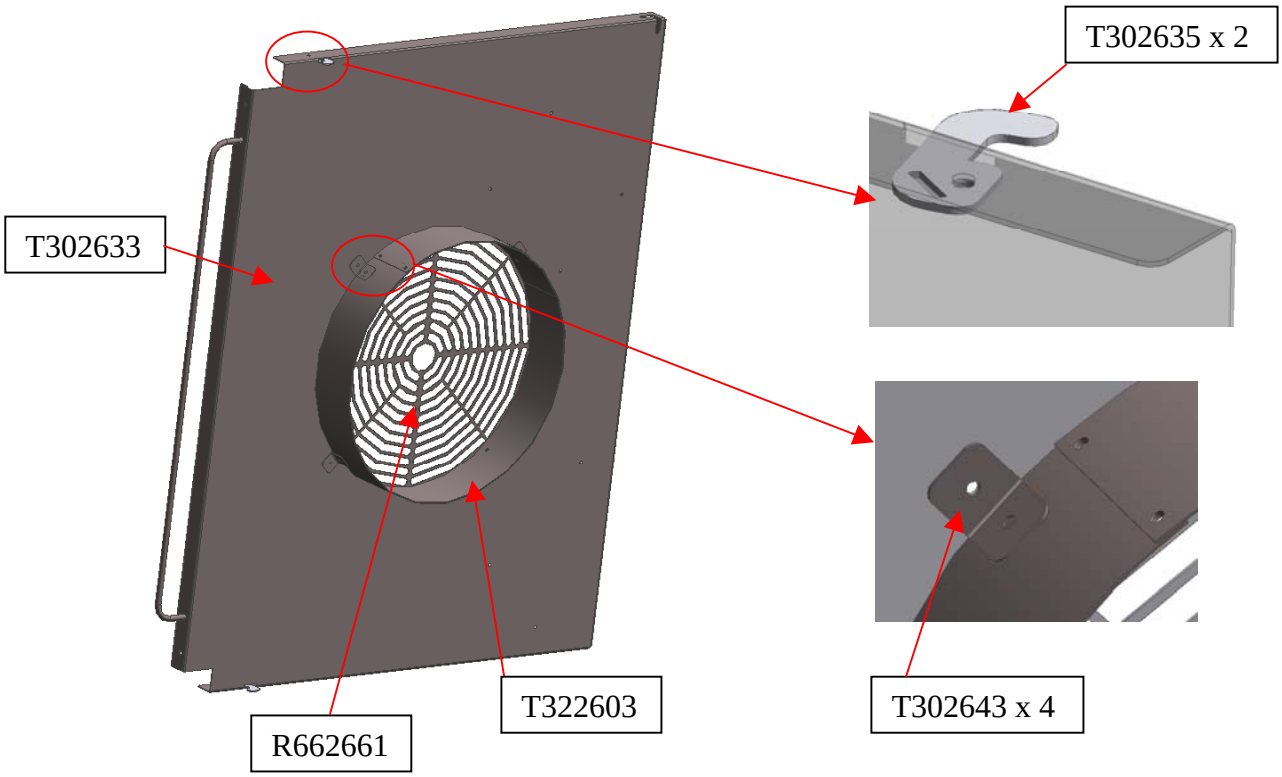

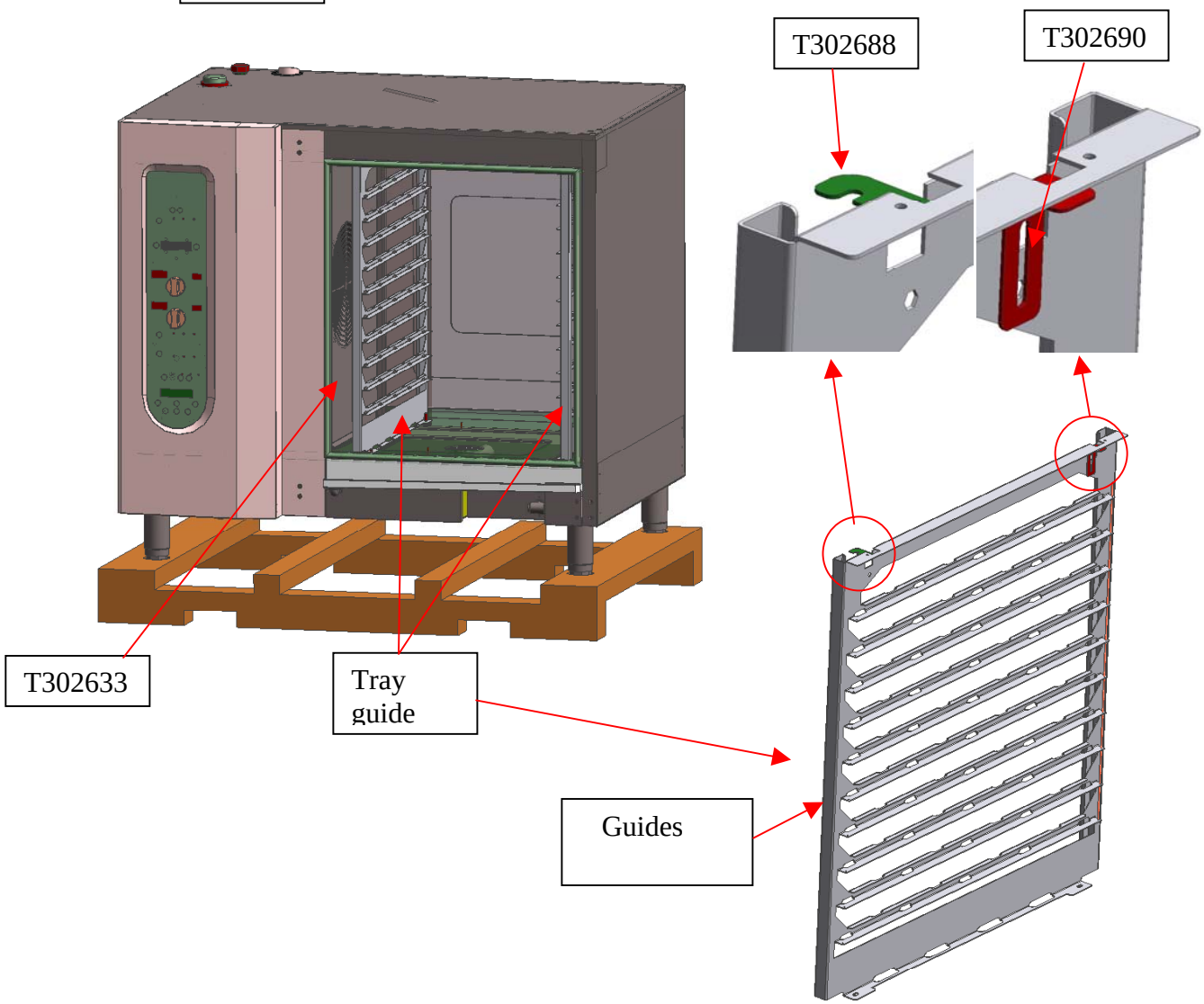

Door hola system

HEP10/21 Labearen muntaiko Pausuak

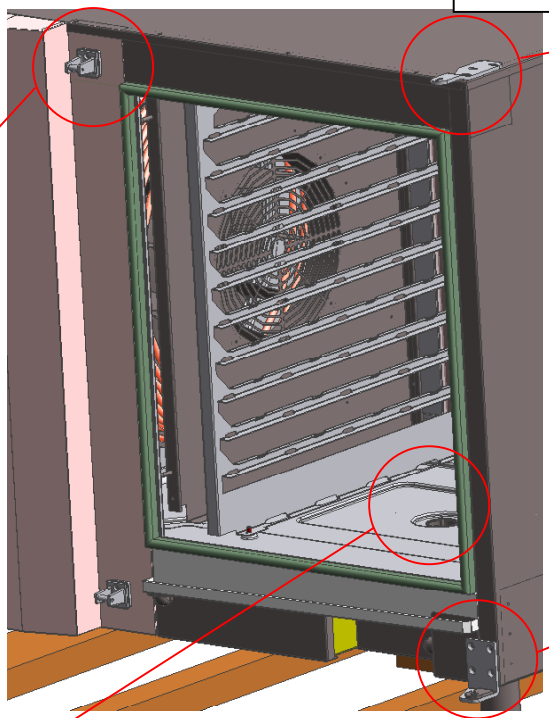

T300520

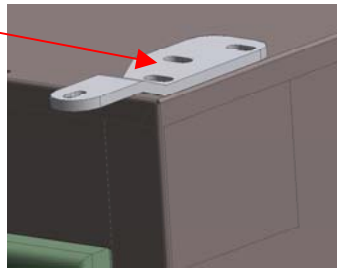

R660538 x2

T300519

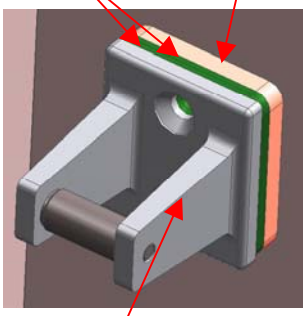

T110506

T300521

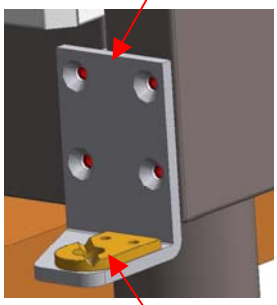

R660549

T302625

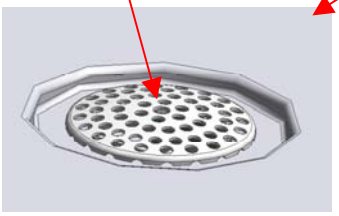

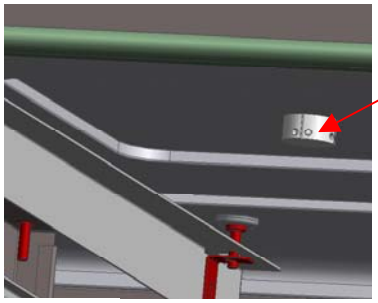

T360712

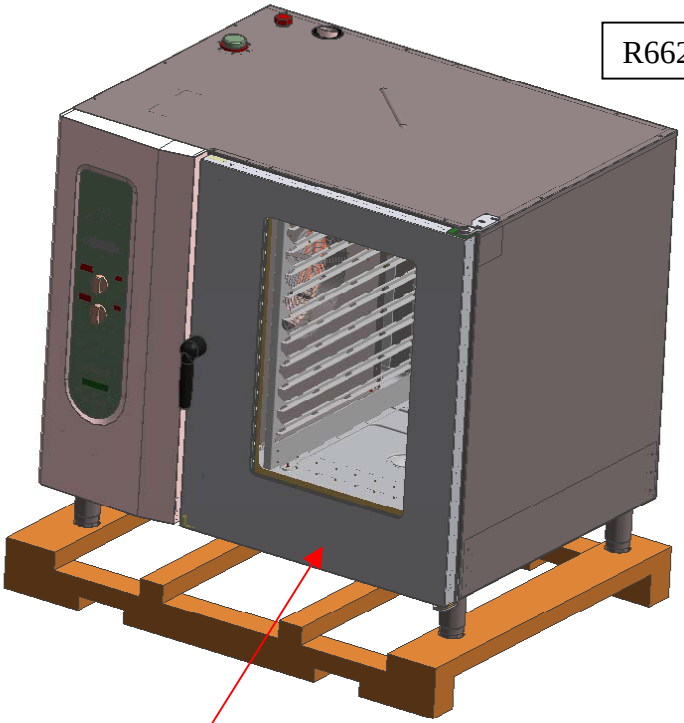

10/21 Door

R662807

Q012041

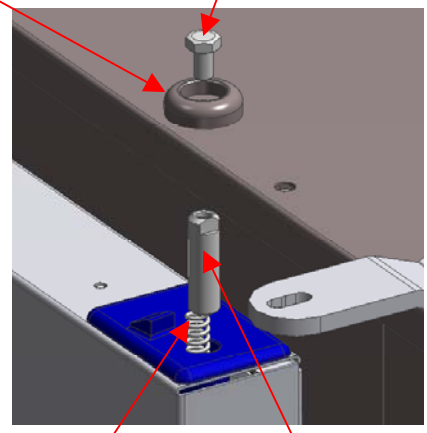

R660534

T360712