DESPIECE TECNICO

# Cocinas a Gas
# Gas ranges
# Fourneaux à gaz
# Gas-herde
# Cucine a gas
# Fogão a gás

## GAMA 900

## Modelos:

## CGF9-120 PLUS
## CGF9-121 PLUS

***Octubre 2011 October***

***Revisado Junio 2013 June Revised***

FAGOR

FAGOR INDUSTRIAL

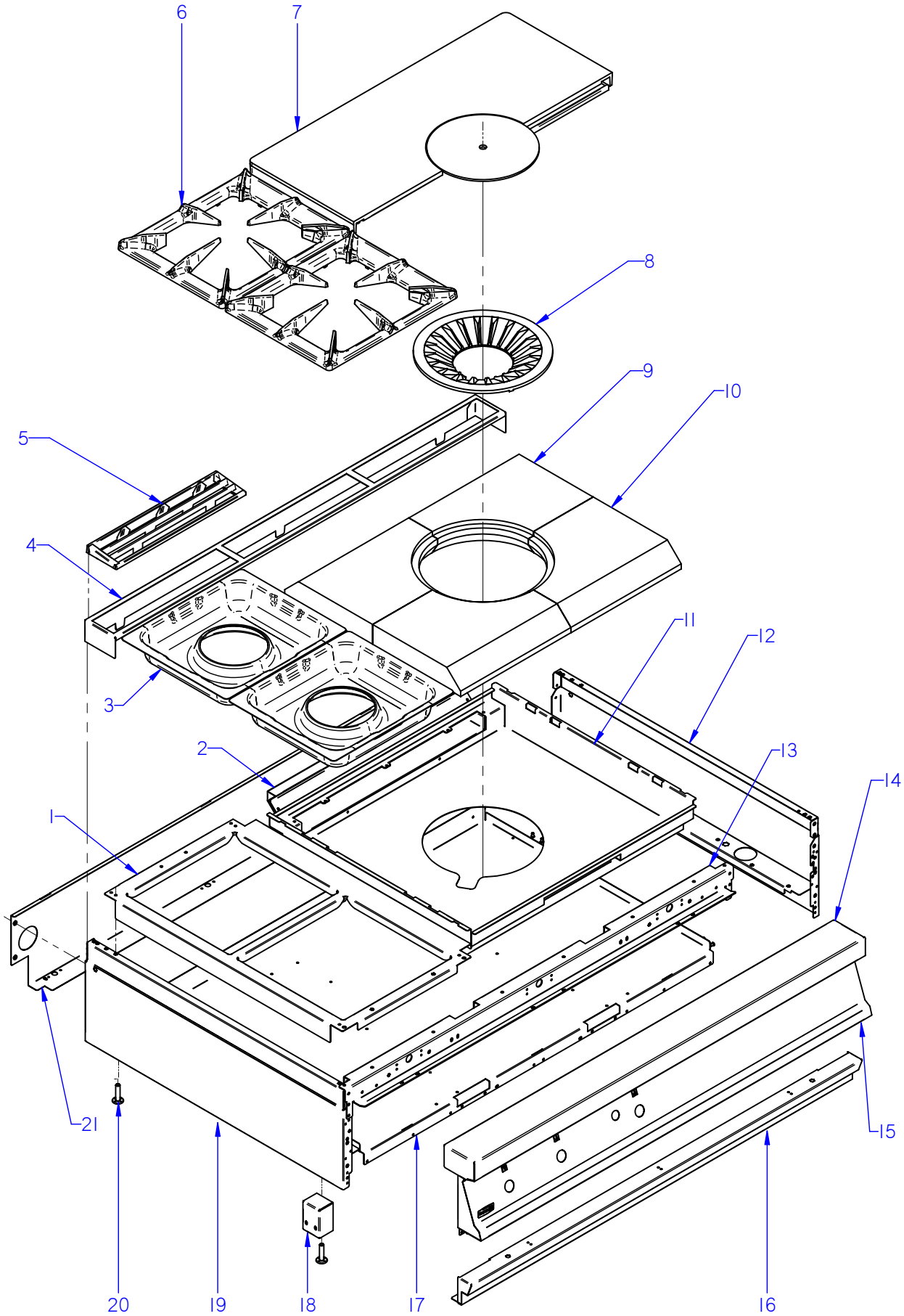


ITEM MARCADO EN COLOR = REPUESTO RECOMENDADO
COLOURED ITEM = RECOMMENDED SPARE PART

| Nº plano / N º plane | Firma | Fecha / Date | Denominación / Denomination: MUEBLE / FITTING | Lamina / Sheet | |
|---|---|---|---|---|---|
| C-2880 | | 2011-10 | COCINA CGF9-120 PLUS | 1 | Fagor Industrial S.Coop. FAGOR Oñate |

| MOD. | COCINAS / RANGES | ZONA / ZONE | MUEBLE / FITTING | PLANO DIAGRAM | C-2880 |
|---|---|---|---|---|---|

| ITEM | CODIGO REFERENCE | DENOMINACION | DENOMINATION | CGF9-120 I PLUS | CGF9-120 D PLUS | | | | | | | ELIMINADO ELIMINATED | INTRODUCID. INTRODUCED | NOTAS |
|---|---|---|---|---|---|---|---|---|---|---|---|---|---|---|
| 1 | U205411000 | MESA CGF9-121 I | BENCH CGF9-121 I | 1 | _ | | | | | | | | | |
| 1 | U205410000 | MESA CGF9-121 D | BENCH CGF9-121 D | _ | 1 | | | | | | | | | |
| | Q152004000 | TORNIL, APLASTADO M5x13 A304 | FLAT HEADED BOLT M5x13 A304 | 10 | 10 | | | | | | | | | |
| | Q221342000 | REMACHE EXAGONAL M5 | HEXAGONAL RIVET M5 | 4 | 4 | | | | | | | | | |
| 2 | U962664000 | ANTERIOR DE CHIMENEA AD | FLUEPIPE FRONT AD | 1 | 1 | | | | | | | | | |
| S/Nº | U962665000 | POSTERIOR CHIMENEA AD | REAR FLUEPIPE AD | 1 | 1 | | | | | | | | | |
| | Q419005000 | REMACHE 4x8 ALMG3 / ALUMINIO | RIVET 4X8 ALMG3 / ALUMINIUM | 11 | 11 | | | | | | | | | |
| 3 | U025473000 | BACINETA QUEMADOR G900 | BASIN BURNER G900 | 2 | 2 | | | | | | | | | |
| 4 | R205440000 | SOPORTE EMBELLECEDOR 1,5 M | TRIM SUPPORT 1.5 M | 1 | 1 | | | | | | | | | |
| 5 | R205425000 | EMBELLECEDOR ESMALTE | ENAMEL TRIM | 3 | 3 | | | | | | | | | |
| 6 | U035409000 | PARRILLA GAMA 900 | GRILL 900 RANGE | 2 | 2 | | | | | | | | | |
| 7 | U025455000 | CONJ.MEDIA PLACA + RODELA | MEDIUM PLATE + GUIDE RING | 2 | 2 | | | | | | | | | |
| 8 | U195420000 | RODELA DIFUSORA FG-8 | DISPENSER GUIDE RING FG-8 | 1 | 1 | | | | | | | | | |
| 9 | U615408000 | REFRACTARIO DERECHO | RIGHT REFRACTORY | 2 | 2 | | | | | | | | | |
| 10 | U615407000 | REFRACTARIO IZQUIERDO | LEFT REFRACTORY | 2 | 2 | | | | | | | | | |
| 11 | U962661000 | CAJON REFRACTARIO AD | REFRACTORY DRAWER AD | 1 | 1 | | | | | | | | | |
| 12 | R062810000 | PANEL LATERAL DERECHO G900 | RIGHT SIDE PANEL G900 | 1 | 1 | | | | | | | | | |
| | Q221342000 | REMACHE EXAGONAL M5 | HEXAGONAL RIVET M5 | 8 | 8 | | | | | | | | | |
| 13 | U962607000 | ESCUA INTER AMAR ANTE 1,5 M | BRACKET INTER FASTE. FRONT | 1 | 1 | | | | | | | | | |
| | Q221342000 | REMACHE EXAGONAL M5 | HEXAGONAL RIVET M5 | 4 | 4 | | | | | | | | | |
| | Q012032000 | TORNILLO EXAGONAL M5x15 | HEXAGONAL BOLT M5x15 | 4 | 4 | | | | | | | | | |
| | Q152004000 | TORNIL, APLASTADO M5x13 A304 | FLAT HEADED BOLT M5x13 A304 | 6 | 6 | | | | | | | | | |
| | Q302022000 | ARANDELA 16x6x1,2 A304 | WASHER 16x6x1.2 A304 | 6 | 6 | | | | | | | | | |
| 14 | U965402000 | ANTERIOR MESA 1,5 M AD | BENCH FRONT 1.5 M AD | 1 | 1 | | | | | | | | | |
| | Q152004000 | TORNIL, APLASTADO M5x13 A304 | FLAT HEADED BOLT M5x13 A304 | 2 | 2 | | | | | | | | | |
| | Q302022000 | ARANDELA 16x6x1,2 A304 | WASHER 16x6x1.2 A304 | 2 | 2 | | | | | | | | | |
| 15 | U962814000 | PORTAMANDOS CGF9-120 I AD | CONTROL HOLDER CGF9-120 I | 1 | _ | | | | | | | | | |
| 15 | U962808000 | PORTAMANDOS CGF9-120 D AD | CONTROL HOLDER CGF9-120 D | _ | 1 | | | | | | | | | |
| | U022836000 | ESCUDO FAGOR | FAGOR EMBLEM | 1 | 1 | | | | | | | | | |
| | Q221023000 | CLIP SUJECIÓN RÁPIDA Ø5 | RAPID CONNECT CLIP Ø5 | 2 | 2 | | | | | | | | | |
| | Q152004000 | TORNIL, APLASTADO M5x13 A304 | FLAT HEADED BOLT M5x13 | 4 | 4 | | | | | | | | | |

| MOD. | COCINAS / RANGES | ZONA / ZONE | MUEBLE / FITTING | PLANO DIAGRAM | C-2880 |
|---|---|---|---|---|---|

| ITEM | CODIGO REFERENCE | DENOMINACION | DENOMINATION | CGF9-120 I PLUS | CGF9-120 D PLUS | | | | | | | ELIMINADO ELIMINATED | INTRODUCID. INTRODUCED | NOTAS |
|---|---|---|---|---|---|---|---|---|---|---|---|---|---|---|
| 16 | U032809000 | ZOCALO 1,5 M | SKIRTING 1.5 M | 1 | 1 | | | | | | | | | |
| | Q419005000 | REMACHE 4x8 ALMG3 / ALUMINIO | RIVET 4X8 ALMG3 / ALUMINIUM | 2 | 2 | | | | | | | | | |
| 17 | U962639000 | BASE CG9-60 AD | BASE CG9-60 AD | 1 | 1 | | | | | | | | | |
| | Q419005000 | REMACHE 4x8 ALMG3 / ALUMINIO | RIVET 4X8 ALMG3 / ALUMINIUM | 16 | 16 | | | | | | | | | |
| 18 | H012805000 | ESCUADRA AMARRE PATA | LEG FASTENING BRACKET | 2 | 2 | | | | | | | | | |
| | Q162030000 | TUERCA EXAGONAL M5 | HEXAGONAL NUT M5 | 4 | 4 | | | | | | | | | |
| | Q302022000 | ARANDELA 16x6x1,2 A304 | WASHER 16x6x1.2 A304 | 4 | 4 | | | | | | | | | |
| | Q221345000 | REMACHE EXAGONAL M10 | HEXAGONAL RIVET M10 | 2 | 2 | | | | | | | | | |
| 19 | R062811000 | PANEL LATERAL IZQUIERDO G900 | LEFT SIDE PANEL G900 | 1 | 1 | | | | | | | | | |
| | Q221342000 | REMACHE EXAGONAL M5 | HEXAGONAL RIVET M5 | 3 | 3 | | | | | | | | | |
| | Q221343000 | REMACHE EXAGONAL M6 | HEXAGONAL RIVET M6 | 5 | 5 | | | | | | | | | |
| 20 | Z200107000 | PATA | LEG | 4 | 4 | | | | | | | | | |
| | Q221345000 | REMACHE EXAGONAL M10 | HEXAGONAL RIVET M10 | 4 | 4 | | | | | | | | | |
| S/Nº | X010503000 | CIERRE MUELLE | LOCK SPRING | 4 | 4 | | | | | | | | | |
| | Q419007000 | REMACHE TUBULAR C/V Ø2x6 | TUBULAR RIVET C/V Ø2x6 | 8 | 8 | | | | | | | | | |
| 21 | U962644000 | PANEL POSTERIOR 1,5 M | REAR PANEL 1.5 M | 1 | 1 | | | | | | | | | |
| | Q419005000 | REMACHE 4x8 ALMG3 / ALUMINIO | RIVET 4X8 ALMG3 / ALUMINIUM | 4 | 4 | | | | | | | | | |
| | Q302022000 | ARANDELA 16x6x1,2 A304 | WASHER 16x6x1.2 A304 | 4 | 4 | | | | | | | | | |

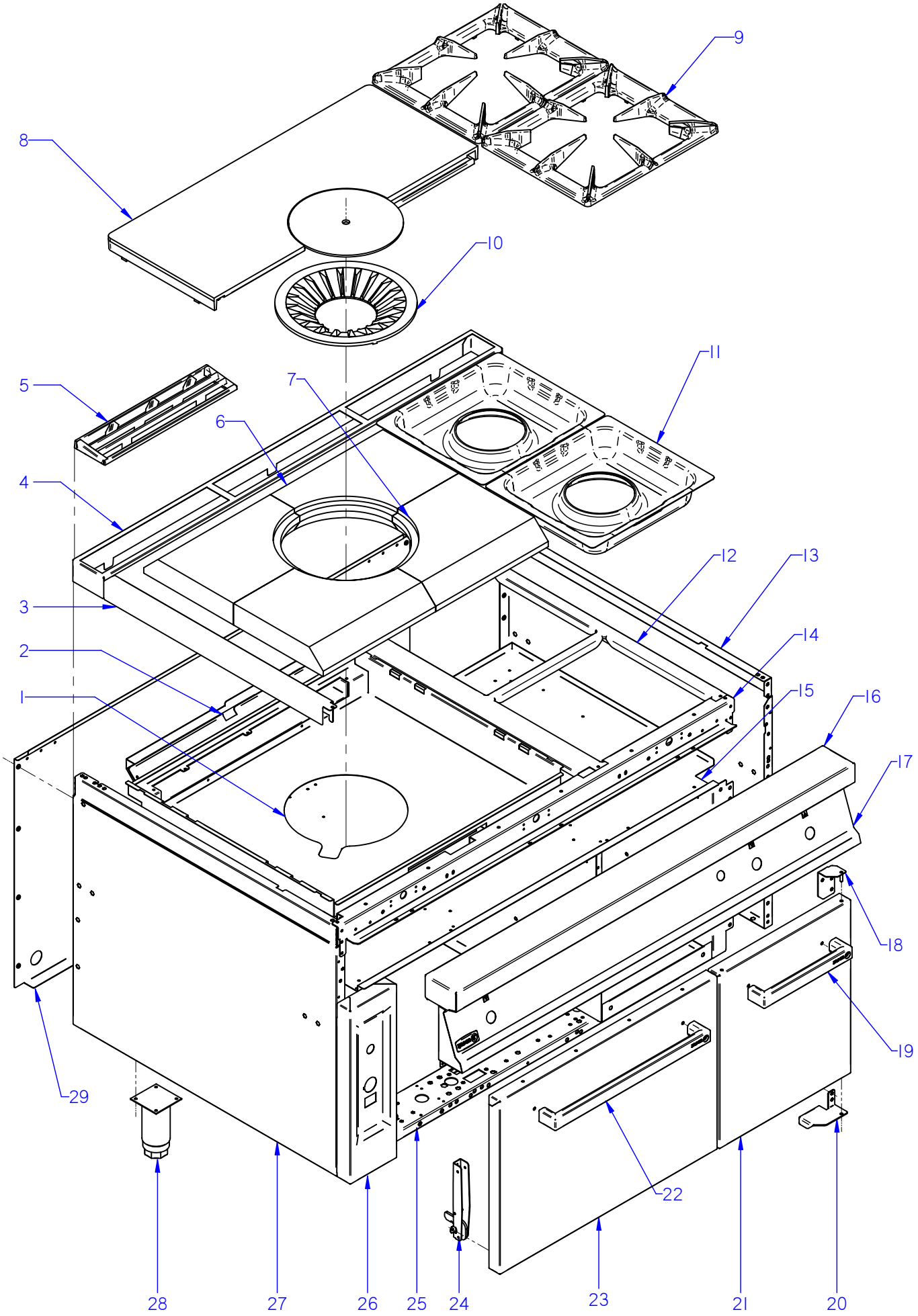


ITEM MARCADO EN COLOR = REPUESTO RECOMENDADO
COLOURED ITEM = RECOMMENDED SPARE PART

| Nº plano / N º plane | Firma | Fecha / Date | Denominación / Denomination: MUEBLE / FITTING | Lamina / Sheet | |
|---|---|---|---|---|---|
| C-2881 | | 2011-10 | COCINA CGF9-121 PLUS | 2 | Fagor Industrial S.Coop. FAGOR Oñate |

| MOD. | COCINAS / RANGES | ZONA / ZONE | MUEBLE / FITTING | PLANO DIAGRAM | C-2881 |
|---|---|---|---|---|---|

| ITEM | CODIGO REFERENCE | DENOMINACION | DENOMINATION | CGF9-121 I PLUS | CGF9-121 D PLUS | | | | | | | ELIMINADO ELIMINATED | INTRODUCID. INTRODUCED | NOTAS |
|---|---|---|---|---|---|---|---|---|---|---|---|---|---|---|
| 1 | U962661000 | CAJON REFRACTARIO AD | REFRACTORY DRAWER AD | 1 | 1 | | | | | | | | | |
| 2 | U962664000 | ANTERIOR DE CHIMENEA AD | FLUEPIPE FRONT AD | 1 | 1 | | | | | | | | | |
| S/Nº | U962665000 | POSTERIOR CHIMENEA AD | REAR FLUEPIPE AD | 1 | 1 | | | | | | | | | |
| | Q419005000 | REMACHE 4x8 ALMG3 / ALUMINIO | RIVET 4X8 ALMG3 / ALUMINIUM | 11 | 11 | | | | | | | | | |
| 3 | R152807000 | LATERAL DE MESA | SIDE BENCH | 2 | 2 | | | | | | | | | |
| 4 | R205440000 | SOPORTE EMBELLECEDOR 1,5 M | TRIM SUPPORT 1.5 M | 1 | 1 | | | | | | | | | |
| 5 | R205425000 | EMBELLECEDOR ESMALTE | ENAMEL TRIM | 3 | 3 | | | | | | | | | |
| 6 | U615408000 | REFRACTARIO DERECHO | RIGHT REFRACTORY | 2 | 2 | | | | | | | | | |
| 7 | U615407000 | REFRACTARIO IZQUIERDO | LEFT REFRACTORY | 2 | 2 | | | | | | | | | |
| 8 | U025455000 | CONJ.MEDIA PLACA + RODELA | MEDIUM PLATE + GUIDE RING | 2 | 2 | | | | | | | | | |
| 9 | U035409000 | PARRILLA GAMA 900 | GRILL 900 RANGE | 2 | 2 | | | | | | | | | |
| 10 | U195420000 | RODELA DIFUSORA FG-8 | DISPENSER GUIDE RING FG-8 | 1 | 1 | | | | | | | | | |
| 11 | U025473000 | BACINETA QUEMADOR G900 | BASIN BURNER G900 | 2 | 2 | | | | | | | | | |
| 12 | U205411000 | MESA CGF9-121 I | BENCH CGF9-121 I | 1 | _ | | | | | | | | | |
| 12 | U205410000 | MESA CGF9-121 D | BENCH CGF9-121 D | _ | 1 | | | | | | | | | |
| | Q152004000 | TORNIL, APLASTADO M5x13 A304 | FLAT HEADED BOLT M5x13 A304 | 10 | 10 | | | | | | | | | |
| | Q221342000 | REMACHE EXAGONAL M5 | HEXAGONAL RIVET M5 | 4 | 4 | | | | | | | | | |
| 13 | X162814000 | PANEL LATERAL DERECHO G9-00 | RIGHT SIDE PANEL G9-00 | 1 | 1 | | | | | | | | | |
| | Q221343000 | REMACHE EXAGONAL M6 | HEXAGONAL RIVET M6 | 11 | 11 | | | | | | | | | |
| | Q221342000 | REMACHE EXAGONAL M5 | HEXAGONAL RIVET M5 | 11 | 11 | | | | | | | | | |
| | Q012043000 | TORNILLO EXAGONAL M6x20 A304 | HEXAGONAL BOLT M6x20 A304 | 2 | 2 | | | | | | | | | |
| | Q152004000 | TORNILLO APLASTADO M5x13 A30 | FLAT HEADED BOLT M5x13 A304 | 3 | 3 | | | | | | | | | |
| 14 | U962607000 | ESCUA INTER AMAR ANTE 1,5 M | BRACKET INTER FASTE. FRONT | 1 | 1 | | | | | | | | | |
| | Q221342000 | REMACHE EXAGONAL M5 | HEXAGONAL RIVET M5 | 4 | 4 | | | | | | | | | |
| | Q012032000 | TORNILLO EXAGONAL M5x15 | HEXAGONAL BOLT M5x15 | 4 | 4 | | | | | | | | | |
| | Q152004000 | TORNIL, APLASTADO M5x13 A304 | FLAT HEADED BOLT M5x13 A304 | 6 | 6 | | | | | | | | | |
| | Q302022000 | ARANDELA 16x6x1,2 A304 | WASHER 16x6x1.2 A304 | 6 | 6 | | | | | | | | | |
| 15 | U962604000 | BASE BANDEJAS 1,5 M | TRAY BASE 1.5 M | 1 | 1 | | | | | | | | | |
| | Q419005000 | REMACHE 4x8 ALMG3 / ALUMINIO | RIVET 4X8 ALMG3 / ALUMINIUM | 2 | 2 | | | | | | | | | |
| | Q152004000 | TORNIL, APLASTADO M5x13 A304 | FLAT HEADED BOLT M5x13 A304 | 3 | 3 | | | | | | | | | |
| | | | | | | | | | | | | | | |

| MOD. | COCINAS / RANGES | ZONA / ZONE | MUEBLE / FITTING | PLANO DIAGRAM | C-2881 |
|---|---|---|---|---|---|

| ITEM | CODIGO REFERENCE | DENOMINACION | DENOMINATION | CGF9-121 I PLUS | CGF9-121 D PLUS | | | | | | | ELIMINADO ELIMINATED | INTRODUCID. INTRODUCED | NOTAS |
|---|---|---|---|---|---|---|---|---|---|---|---|---|---|---|
| 16 | U965402000 | ANTERIOR MESA 1,5 M AD | BENCH FRONT 1.5 M AD | 1 | 1 | | | | | | | 30.11.12 | | |
| 16 | 12007213 | ANTERIOR MESA 1,5 M PLUS | BENCH FRONT 1.5 M PLUS | 1 | 1 | | | | | | | | 30.11.12 | |
| | Q152004000 | TORNIL, APLASTADO M5x13 A304 | FLAT HEADED BOLT M5x13 A304 | 2 | 2 | | | | | | | | | |
| | Q302022000 | ARANDELA 16x6x1,2 A304 | WASHER 16x6x1.2 A304 | 2 | 2 | | | | | | | | | |
| 17 | U962816000 | PORTAMANDOS CGF9-121 I AD | CONTROL HOLDER CGF9-121 I | 1 | _ | | | | | | | | | |
| 17 | U962818000 | PORTAMANDOS CGF9-121 D AD | CONTROL HOLDER CGF9-121 D | _ | 1 | | | | | | | | | |
| | U022836000 | ESCUDO FAGOR | FAGOR EMBLEM | 1 | 1 | | | | | | | | | |
| | Q221023000 | CLIP SUJECIÓN RÁPIDA Ø5 | RAPID CONNECT CLIP Ø5 | 2 | 2 | | | | | | | | | |
| | Q152004000 | TORNIL, APLASTADO M5x13 A304 | FLAT HEADED BOLT M5x13 A304 | 4 | 4 | | | | | | | | | |
| 18 | U962613000 | BISAGRA SUPERIOR DERECHA | UPPER RIGHT HINGE | 1 | 1 | | | | | | | | | |
| | Q221342000 | REMACHE EXAGONAL M5 | HEXAGONAL RIVET M5 | 1 | 1 | | | | | | | | | |
| 19 | Z710558000 | ASA CAPOTA AD | AD HOOD HANDLE | 1 | 1 | | | | | | | | | |
| | Q162040000 | TUERCA EXAGONAL M6 | HEXAGONAL NUT M6 | 1 | 1 | | | | | | | | | |
| | Q302022000 | ARANDELA 16x6x1,2 A304 | WASHER 16x6x1.2 A304 | 1 | 1 | | | | | | | | | |
| 20 | U020511000 | BISAGRA DERECHA INFERIOR | LOWER RIGHT HINGE | 1 | 1 | | | | | | | | | |
| | Q232040000 | ARANDELA A6 | WASHER A6 | 1 | 1 | | | | | | | | | |
| | X960504000 | TORNILLO DE GIRO M8 | ROTATION BOLT M8 | 1 | 1 | | | | | | | | | |
| | Q012042000 | TORNILLO EXAGONAL M6x15 A304 | HEXAGONAL BOLT M6x15 A304 | 1 | 1 | | | | | | | | | |
| | Q302022000 | ARANDELA 16x6x1,2 A304 | WASHER 16x6x1.2 A304 | 1 | 1 | | | | | | | | | |
| 21 | U960501000 | PUERTA LATERAL AD | SIDE DOOR AD | 1 | 1 | | | | | | | | | |
| | Q419005000 | REMACHE 4x8 ALMG3 / ALUMINIO | RIVET 4X8 ALMG3 / ALUMINIUM | 1 | 1 | | | | | | | | | |
| S/Nº | X960501000 | IMAN | MAGNET | 2 | 2 | | | | | | | | | |
| S/Nº | X960502000 | FIJACION IMAN | MAGNET ATTACHMENT | 2 | 2 | | | | | | | | | |
| | Q012021000 | TORNILLO EXAGONAL M4X10 | HEXAGONAL BOLT M4x10 | 2 | 2 | | | | | | | | | |
| | Q232020000 | ARANDELA A4 | WASHER A4 | 2 | 2 | | | | | | | | | |
| 22 | Z900527000 | ASA | HANDLE | 1 | 1 | | | | | | | | | |
| | Q012041000 | TORNILLO EXAGONAL M6x10 | HEXAGONAL BOLT M6x10 | 2 | 2 | | | | | | | | | |
| | Q302022000 | ARANDELA 16x6x1,2 A304 | WASHER 16x6x1.2 A304 | 2 | 2 | | | | | | | | | |
| 23 | U910501000 | PUERTA DE HORNO | OVEN DOOR | 1 | 1 | | | | | | | | | |
| 24 | U020528000 | BISAGRA CIERRE HORNO | OVEN LOCK HINGE | 2 | 2 | | | | | | | | | |
| | Q152022000 | TORNILLO M6x8 | BOLT M6x8 | 6 | 6 | | | | | | | | | |

| MOD. | COCINAS / RANGES | ZONA / ZONE | MUEBLE / FITTING | PLANO DIAGRAM | C-2881 |
|---|---|---|---|---|---|

| ITEM | CODIGO REFERENCE | DENOMINACION | DENOMINATION | CGF9-121 I PLUS | CGF9-121 D PLUS | | | | | | | ELIMINADO ELIMINATED | INTRODUCID. INTRODUCED | NOTAS |
|---|---|---|---|---|---|---|---|---|---|---|---|---|---|---|
| 25 | U962601000 | LISTON SOPORTE PATAS 1,5 M AD | LEG SUPPORT STRIP 1.5 M AD | 2 | 2 | | | | | | | | | |
| 26 | U962829000 | PORTAMAN. LATERAL HORNO AD | OVEN SIDE CONTROL HOLDER | 1 | 1 | | | | | | | 01,10,12 | | |
| 26 | 12046661 | PORTAM. LAT. HORNO PLUS MEK | OVEN SIDE CONTROL HOLDER | 1 | 1 | | | | | | | | 01,10,12 | |
| | Q152004000 | TORNIL, APLASTADO M5x13 A304 | FLAT HEADED BOLT M5x13 A304 | 2 | 2 | | | | | | | | | |
| 27 | X162813000 | PANEL LATERAL IZQUIERDO G900 | LEFT SIDE PANEL G900 | 1 | 1 | | | | | | | | | |
| | Q221343000 | REMACHE EXAGONAL M6 | HEXAGONAL RIVET M6 | 11 | 11 | | | | | | | | | |
| | Q221342000 | REMACHE EXAGONAL M5 | HEXAGONAL RIVET M5 | 11 | 11 | | | | | | | | | |
| | Q012043000 | TORNILLO EXAGONAL M6x20 A304 | HEXAGONAL BOLT M6x20 A304 | 2 | 2 | | | | | | | | | |
| | Q152004000 | TORNILLO APLASTADO M5x13 A304 | FLAT HEADED BOLT M5x13 A304 | 3 | 3 | | | | | | | | | |
| 28 | X260151000 | PATA REGULABLE | ADJUSTABLE LEG | 4 | 4 | | | | | | | | | |
| | Q411304000 | REMACHE AVIBULB Ø 4,8 | AVIBULB RIVET Ø 4.8 | 16 | 16 | | | | | | | | | |
| 29 | U962801000 | PANEL POSTERIOR 1,5 M | REAR PANEL 1.5 M | 1 | 1 | | | | | | | | | |
| | Q419005000 | REMACHE 4x8 ALMG3 / ALUMINIO | RIVET 4X8 ALMG3 / ALUMINIUM | 8 | 8 | | | | | | | | | |

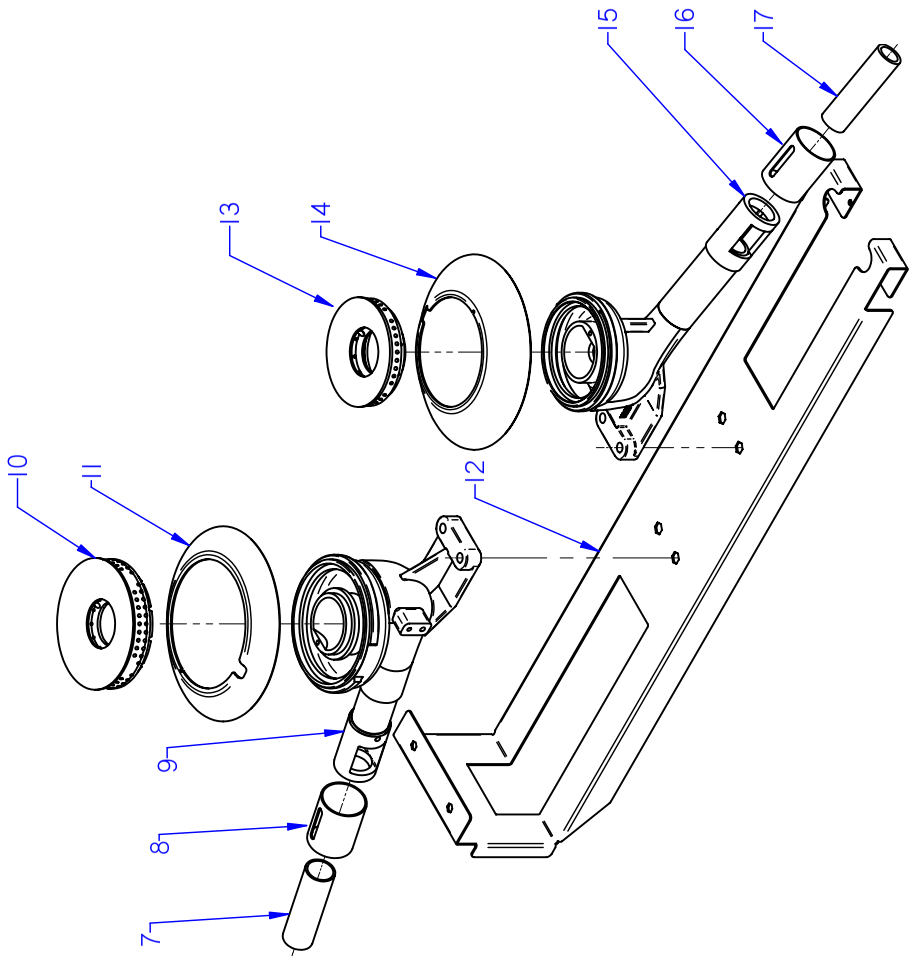


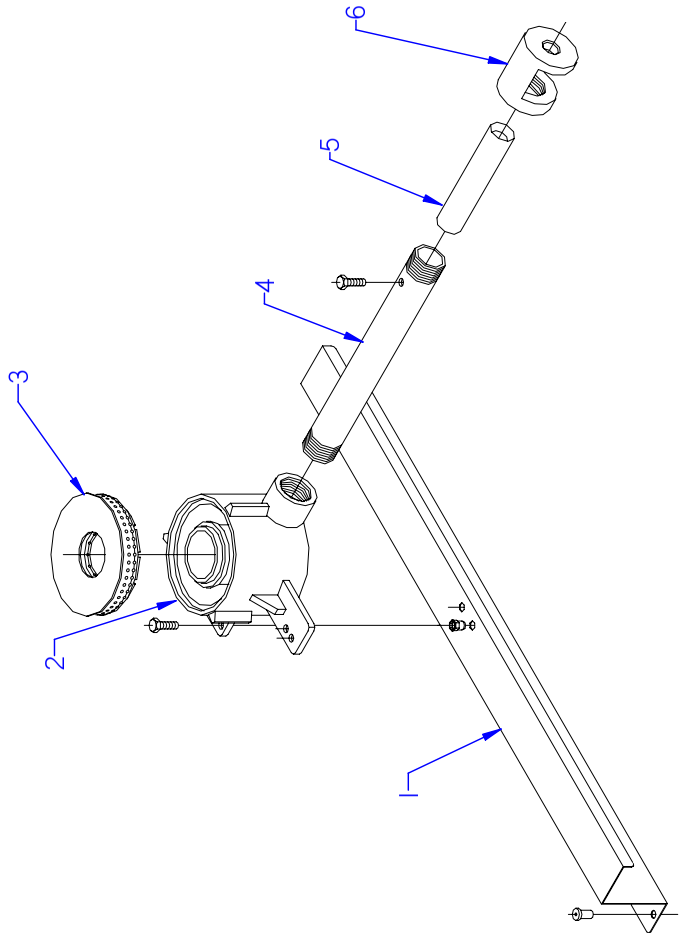


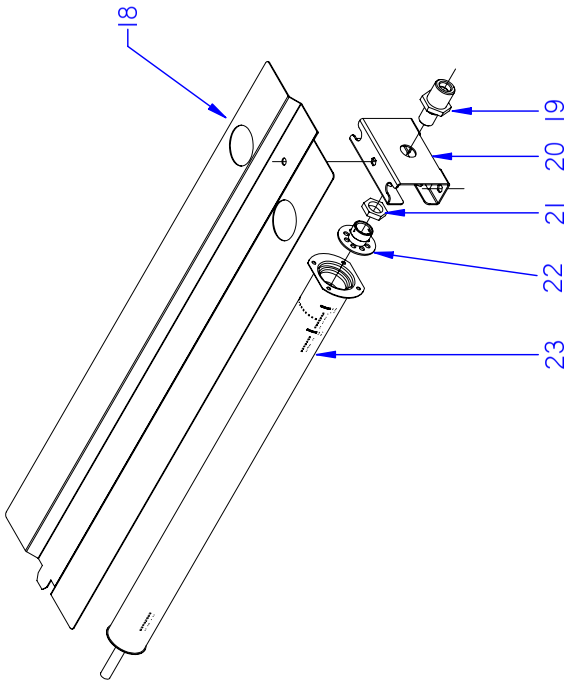


ITEM MARCADO EN COLOR = REPUESTO RECOMENDADO
COLOURED ITEM = RECOMMENDED SPARE PART

| Nº plano / N º plane | Firma | Fecha / Date | Denominación / Denomination: QUEMADORES / BURNERS | Lamina / Sheet | |
|---|---|---|---|---|---|
| C-2882 | | 2011-10 | COCINA CGF9-120 PLUS / 121 PLUS | 3 | Fagor Industrial S.Coop. FAGOR Oñate |

| MOD. | COCINAS / RANGES | ZONA / ZONE | QUEMADORES / BURNERS | PLANO DIAGRAM | C-2882 |
|---|---|---|---|---|---|

| ITEM | CODIGO REFERENCE | DENOMINACION | DENOMINATION | CGF9-120 PLUS | CGF9-121 PLUS | | | | | | | ELIMINADO ELIMINATED | INTRODUCID. INTRODUCED | NOTAS |
|---|---|---|---|---|---|---|---|---|---|---|---|---|---|---|
| 1 | U962660000 | SOPORTE QUEMADOR MESA AD | BURNER SUPPORT STRIP AD | 1 | 1 | | | | | | | | | |
| | Q419005000 | REMACHE 4x8 ALMG3 / ALUMINIO | RIVET 4X8 ALMG3 / ALUMINIUM | 2 | 2 | | | | | | | | | |
| | Q221342000 | REMACHE EXAGONAL M5 | HEXAGONAL RIVET M5 | 2 | 2 | | | | | | | | | |
| 2 | U195702000 | CUERPO DE QUEMADOR MECANI. | BURNER BODY | 1 | 1 | | | | | | | | | |
| 3 | U195701500 | QUEMADOR 10850 KCAL. PINTADO | BURNER10850 KCAL. | 1 | 1 | | | | | | | 10.06.13 | | |
| 3 | 12091667 | QUEMADOR 11,5 Kw AGUAJER | BURNER 11,5 Kw | 1 | 1 | | | | | | | | 10.06.13 | |
| 4 | U195703000 | TUBO MEZCLADOR | MIXING PIPE | 1 | 1 | | | | | | | | | |
| | Q223019000 | TUERCA 3/8 GAS LATÓN | NUT 3/8 GAS BRASS | 1 | 1 | | | | | | | | | |
| | Q153002000 | TORNILLO TAPON | CAP BOLT | 1 | 1 | | | | | | | | | |
| 5 | U775701000 | VENTURI QUEMADOR | VENTURI QUEMADOR | 1 | 1 | | | | | | | | | |
| | Q012031000 | TORNILLO EXAGONAL M5x10 A304 | HEXAGONAL BOLT M5x10 A304 | 1 | 1 | | | | | | | | | |
| 6 | U615700500 | CAMARA DE MEZCLA PINTADA | PAINT MIXING CHAMBER | 1 | 1 | | | | | | | | | |
| 7 | U565700000 | VENTURI QUEMADOR 8000 | VENTURI BURNER 8000 | 1 | 1 | | | | | | | | | |
| 8 | U265702000 | REGULADOR AIRE | AIR CONTROLLER | 1 | 1 | | | | | | | | | |
| | Q132054000 | VARILLA ROSCADA M6 x 12 | THREADED ROD M6 x 12 | 1 | 1 | | | | | | | | | |
| | Q162004000 | TUERCA EXAGONAL M6 | HEXAGONAL NUT M6 | 1 | 1 | | | | | | | | | |
| 9 | U025710000 | CUERPO QUEMADOR 8000 Kcal/H | BURNER BODY 8000 Kcal/h | 1 | 1 | | | | | | | | | |
| 10 | U135702500 | QUEMADOR 8000 | BURNER 8000 | 1 | 1 | | | | | | | | | |
| | Q371026000 | MANGUITO DE SUJECION Ø 4x14 | HANDLE Ø 4x14 | 1 | 1 | | | | | | | | | |
| | Q012045000 | TORNILLO EXAGONAL M6x30 A304 | HEXAGONAL BOLT M6x30 A304 | 1 | 1 | | | | | | | | | |
| | Q302022000 | ARANDELA 16x6x1,2 A304 | WASHER 16x6x1.2 A304 | 1 | 1 | | | | | | | | | |
| | U565011000 | TUERCA GUIA | GUIDE NUT | 1 | 1 | | | | | | | | | |
| 11 | U915703000 | PROTEC. PILOTO QUEMAD. 7000 | BURNER PILOT GUARD 7000 | 1 | 1 | | | | | | | | | |
| | Q372004000 | PASADOR ELASTICO 5x20 | ELASTIC PIN 5x20 | 2 | 2 | | | | | | | | | |
| 12 | U962606000 | LISTON SOP. QUEMADOR AD | BURNER SUPPORT STRIP | 1 | 1 | | | | | | | | | |
| | Q221343000 | REMACHE EXAGONAL M6 | HEXAGONAL RIVET M6 | 4 | 4 | | | | | | | | | |
| | Q221342000 | REMACHE EXAGONAL M5 | HEXAGONAL RIVET M5 | 4 | 4 | | | | | | | | | |
| 13 | U445731000 | QUEMADOR 4000 (00545-010) | BURNER 4000 (00545-010) | 1 | 1 | | | | | | | 26,08,12 | | |
| 13 | 12039162 | QUEMADOR 4000 Kcal/H | BURNER 4000 Kcal/H | 1 | 1 | | | | | | | | 26,08,12 | |
| | Q012045000 | TORNILLO EXAGONAL M6x30 A304 | HEXAGONAL BOLT M6x30 A304 | 1 | 1 | | | | | | | | | |
| | Q302022000 | ARANDELA 16x6x1,2 A304 | WASHER 16x6x1.2 A304 | 1 | 1 | | | | | | | | | |

| MOD. | COCINAS / RANGES | ZONA / ZONE | QUEMADORES / BURNERS | PLANO DIAGRAM | C-2882 |
|---|---|---|---|---|---|

| ITEM | CODIGO REFERENCE | DENOMINACION | DENOMINATION | CGF9-120 PLUS | CGF9-121 PLUS | | | | | | | ELIMINADO ELIMINATED | INTRODUCID. INTRODUCED | NOTAS |
|---|---|---|---|---|---|---|---|---|---|---|---|---|---|---|
| 14 | U025712000 | PROTEC. PILOTO QUEMAD. 4000 | BURNER PILOT GUARD 4000 | 1 | 1 | | | | | | | | | |
| 15 | U025709000 | CUERPO QUEMADOR 4000Kcal/H | BURNER BODY 4000 Kcal/H | 1 | 1 | | | | | | | | | |
| | Q371026000 | MANGUITO DE SUJECION Ø 4x14 | HANDLE Ø 4x14 | 1 | 1 | | | | | | | | | |
| 16 | U265702000 | REGULADOR AIRE | AIR CONTROLLER | 1 | 1 | | | | | | | | | |
| | Q131542000 | VARILLA ROSCADA M6 x 15 | THREADED ROD M6 x 15 | 1 | 1 | | | | | | | | | |
| | Q162004000 | TUERCA EXAGONAL M6 | HEXAGONAL NUT M6 | 1 | 1 | | | | | | | | | |
| 17 | U125720000 | VENTURI QUEMADOR 4000 kcl | VENTURI BURNER 4000 kcl | 1 | 1 | | | | | | | | | |
| 18 | U915613000 | DEFLECTOR QUEMADOR HORNO | OVEN BURNER DEFLECTOR | _ | 1 | | | | | | | | | |
| | Q152004000 | TORNIL, APLASTADO M5x13 A304 | FLAT HEADED BOLT M5x13 A304 | _ | 1 | | | | | | | | | |
| | Q302022000 | ARANDELA 16x6x1,2 A304 | WASHER 16x6x1.2 A304 | _ | 1 | | | | | | | | | |
| 19 | X505724000 | MANGUITO PORTATOBERAS | NOZZLE HOLDER SLEEVE | _ | 1 | | | | | | | | | |
| 20 | U105635000 | AMARRE QUEMADOR HORNO(HG) | OVEN BURNER FASTENING (HG) | _ | 1 | | | | | | | | | |
| | Q012031000 | TORNILLO EXAGONAL M5x10 A304 | HEXAGONAL BOLT M5x10 A304 | _ | 2 | | | | | | | | | |
| | Q222041000 | REMACHE EXAGONAL M4 (INOX) | HEXAGONAL RIVET M4 (INOX) | _ | 4 | | | | | | | | | |
| 21 | Q223019000 | TUERCA 3/8 GAS LATÓN | NUT 3/8 GAS BRASS | _ | 1 | | | | | | | | | |
| 22 | X505013000 | REGULADOR DE AIRE POLIDORO | POLIDORO AIR CONTROL | _ | 1 | | | | | | | | | |
| | Q031322000 | TORNILLO ALOMADO M4X15 | CURVED SCREW M4X15 | _ | 1 | | | | | | | | | |
| 23 | U105701000 | QUEMADOR HORNO | OVEN BURNER. | _ | 1 | | | | | | | | | |
| | Q042022000 | TORNILLO AVELLLANADO M4X15 | COUNTERSUNK BOLT M4x15 | _ | 4 | | | | | | | | | |
| S/Nº | U052401000 | TOBERA Ø 1,45 BP | NOZZLE Ø 1.45 BP | _ | 1 | | | | | | | | | |
| S/Nº | U262400000 | TOBERA Ø 2,15 GN | NOZZLE Ø 2.15 GN | _ | 1 | | | | | | | | | |
| | | | | | | | | | | | | | | |
| | | | | | | | | | | | | | | |
| | | | | | | | | | | | | | | |
| | | | | | | | | | | | | | | |
| | | | | | | | | | | | | | | |
| | | | | | | | | | | | | | | |
| | | | | | | | | | | | | | | |
| | | | | | | | | | | | | | | |
| | | | | | | | | | | | | | | |
| | | | | | | | | | | | | | | |

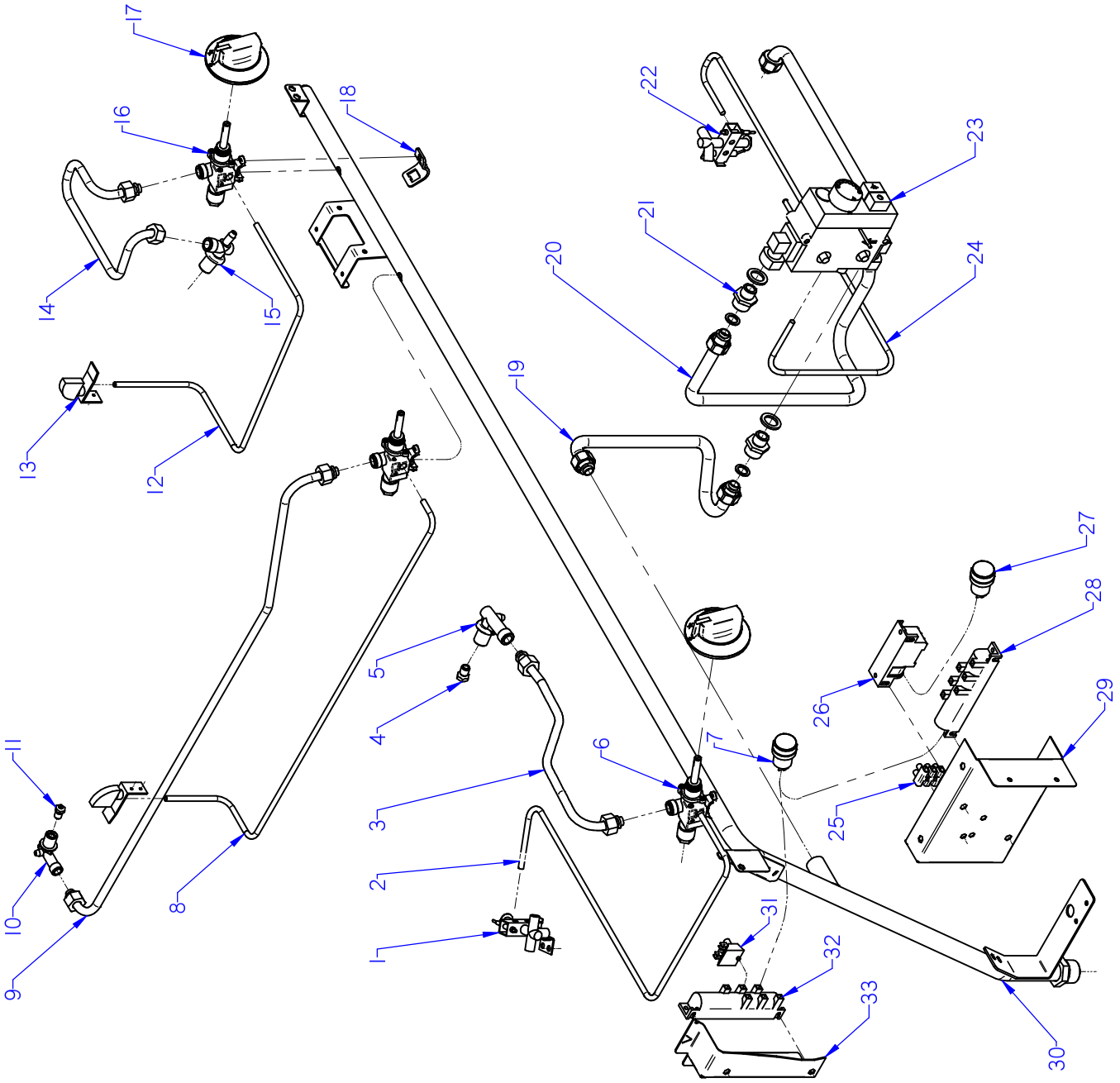


ITEM MARCADO EN COLOR = REPUESTO RECOMENDADO
COLOURED ITEM = RECOMMENDED SPARE PART

| Nº plano / N º plane | Firma | Fecha / Date | Denominación / Denomination: PARTE FUNCIONAL / FUNCTIONAL PART | Lamina / Sheet | |
|---|---|---|---|---|---|
| C-2883 | | 2011-10 | COCINA CGF9-120 PLUS / 121 PLUS | 4 | Fagor Industrial S.Coop. FAGOR Oñate |

| MOD. | COCINAS / RANGES | ZONA / ZONE | PARTE FUNCIONAL / FUNCTIONAL PART | PLANO DIAGRAM | C-2883 |
|---|---|---|---|---|---|

| ITEM | CODIGO REFERENCE | DENOMINACION | DENOMINATION | CGF9-120 I PLUS | CGF9-120 D PLUS | CGF9-121 I PLUS | CGF9-121 D PLUS | | | | | ELIMINADO ELIMINATED | INTRODUCID. INTRODUCED | NOTAS |
|---|---|---|---|---|---|---|---|---|---|---|---|---|---|---|
| 1 | U192104000 | PILOTO COMPLETO | COMPLETE PILOT LIGHT | 1 | 1 | 1 | 1 | | | | | | | |
| S/Nº | U222130000 | TERMOPAR L=600 | THERMOCOUPLE L=600 | 1 | 1 | 1 | 1 | | | | | | | |
| S/Nº | U442137000 | INYECTOR Ø 0,4 GN | INJECTOR Ø 0.4 GN. | 1 | 1 | 1 | 1 | | | | | | | |
| S/Nº | X022131000 | BUJIA | SPARK PLUG | 1 | 1 | 1 | 1 | | | | | | | |
| 2 | U965013000 | CONDUCCIN PILOTO MESA AD | TABLE PILOT CONDUCCIN AD | 1 | 1 | 1 | 1 | | | | | | | |
| S/Nº | S312107000 | MANGUITO TUBO PILOTO | PILOT PIPE HOSE | 2 | 2 | 2 | 2 | | | | | | | |
| S/Nº | X205028000 | BICONO Ø 6 | BICONE Ø 6 | 1 | 1 | 1 | 1 | | | | | | | |
| 3 | U965011000 | TUBO VALVULA QUEMADOR | BURNER VALVE PIPE | 1 | 1 | 1 | 1 | | | | | | | |
| 4 | R302400000 | TOBERA Ø 1,65 BP (10850) | NOZZLE Ø 1.65 BP (10850) | 1 | 1 | 1 | 1 | | | | | | | |
| 4 | U054400000 | TOBERA Ø 2,5 GN (10850) | NOZZLE Ø 2,5 GN (10850) | 1 | 1 | 1 | 1 | | | | | | | |
| 5 | U915014000 | PORTATOBERAS HORNO | OVEN NOZZLE HOLDER | 1 | 1 | 1 | 1 | | | | | | | |
| S/Nº | U565011000 | TUERCA GUIA | NUT GUIDE | 1 | 1 | 1 | 1 | | | | | | | |
| 6 | U942102000 | GRIFO 18700 BY-PASS 1,20 | TAP 18700 BY-PASS 1,20 | 1 | 1 | 1 | 1 | | | | | | | |
| 7 | T723009000 | PULSADOR SERIE MICRO | MICRO SWITCH SERIES | 1 | 1 | 1 | 1 | | | | | | | |
| 8 | U965002000 | TUBO PILOTO POSTERIOR AD | REAR PILOT PIPE AD | 1 | 1 | 1 | 1 | | | | | | | |
| S/Nº | S312107000 | MANGUITO TUBO PILOTO | PILOT PIPE HOSE | 2 | 2 | 2 | 2 | | | | | | | |
| S/Nº | X205028000 | BICONO Ø 6 | BICONE Ø 6 | 1 | 1 | 1 | 1 | | | | | | | |
| 9 | U965005000 | CON. QUEMADOR POSTERIOR AD | REAR BURNER UNIT COMP. | 1 | 1 | 1 | 1 | | | | | | | |
| 10 | U915014000 | PORTATOBERAS HORNO | OVEN NOZZLE HOLDER | 1 | 1 | 1 | 1 | | | | | | | |
| S/Nº | U565011000 | TUERCA GUIA | NUT GUIDE | 1 | 1 | 1 | 1 | | | | | | | |
| | Q153002000 | TORNILLO TAPON | CAP BOLT | 2 | 2 | 2 | 2 | | | | | | | |
| 11 | U122407000 | TOBERA Ø 1,05 BP (4000) | NOZZLE Ø 1.05 BP (4000) | 1 | 1 | 1 | 1 | | | | | | | |
| 11 | R302400000 | TOBERA Ø 1,65 GN (4000) | NOZZLE Ø 1.65 GN (4000) | 1 | 1 | 1 | 1 | | | | | | | |
| 11 | 0631000000 | TOBERA Ø 1,40 BP (8000) | NOZZLE Ø 1.40 BP (8000) | 1 | 2 | 2 | 3 | | | | | | | |
| 11 | U112402000 | TOBERA Ø 2,10 GN (8000) | NOZZLE Ø 2,10 GN (8000) | 1 | 2 | 2 | 3 | | | | | | | |
| 12 | U965001000 | TUBO PILOTO ANTERIOR AD | FRONT PILOT PIPE AD | 1 | 1 | 1 | 1 | | | | | | | |
| S/Nº | S312107000 | MANGUITO TUBO PILOTO | PILOT PIPE HOSE | 2 | 2 | 2 | 2 | | | | | | | |
| S/Nº | U962108000 | BICONO Ø 6 | BICONE Ø 6 | 2 | 3 | 4 | 2 | | | | | | | |
| | | | | | | | | | | | | | | |
| | | | | | | | | | | | | | | |
| | | | | | | | | | | | | | | |

| MOD. | COCINAS / RANGES | ZONA / ZONE | PARTE FUNCIONAL / FUNCTIONAL PART | PLANO DIAGRAM | C-2883 |
|---|---|---|---|---|---|

| ITEM | CODIGO REFERENCE | DENOMINACION | DENOMINATION | CGF9-120 I PLUS | CGF9-120 D PLUS | CGF9-121 I PLUS | CGF9-121 D PLUS | | | | | ELIMINADO ELIMINATED | INTRODUCID. INTRODUCED | NOTAS |
|---|---|---|---|---|---|---|---|---|---|---|---|---|---|---|
| 13 | U962109000 | PILOTO COMPLETO | S140(0140028) PILOT UNIT | 2 | 2 | 2 | 2 | | | | | | | |
| S/Nº | U962107000 | INYECTOR LPG | INJECTOR LPG | 2 | 2 | 2 | 2 | | | | | 23,11,11 | | |
| S/Nº | 12041740 | INYECTOR LPG | INJECTOR LPG | 2 | 2 | 2 | 2 | | | | | | 23,11,11 | |
| S/Nº | U962106000 | INYECTOR NG | INJECTOR NG | 2 | 2 | 2 | 2 | | | | | | | |
| S/Nº | U962101000 | TERMOPAR 1500 | THERMOCOUPLE 1500 | 1 | 1 | 1 | 1 | | | | | | | |
| S/Nº | U962102000 | TERMOPAR 600 | THERMOCOUPLE 600 | 1 | 1 | 1 | 1 | | | | | | | |
| S/Nº | X012101000 | BUJIA 915.037 | SPARK PLUG | 2 | 2 | 2 | 2 | | | | | | | |
| S/Nº | S312107000 | MANGUITO TUBO PILOTO | PILOT PIPE HOSE | 2 | 2 | 2 | 2 | | | | | | | |
| 14 | U965003000 | CONDUC. QUEMADOR ANTERI. AD | FRONT BURNER PIPE AD | 1 | 1 | 1 | 1 | | | | | | | |
| 15 | U265033000 | PORTATOBERAS Ø10 | NOZZLE HOLDER Ø10 | 1 | 1 | 1 | 1 | | | | | | | |
| | Q153002000 | TORNILLO TAPON | CAP BOLT | 2 | 2 | 2 | 2 | | | | | | | |
| 16 | U912115000 | GRIFO 18700 BY-PASS 0,75 | TAP 18700 BY-PASS 0.75 | 1 | 1 | 1 | 1 | | | | | | | |
| 16 | U912109000 | GRIFO 18700 BY-PASS 1,15 | TAP 18700 BY-PASS 1.15 | 1 | 1 | 1 | 1 | | | | | | | |
| 17 | U022117000 | MANDO MONT COCINA GAS Ø8 | GAS COOK. ASSEMBLY CTRL Ø8 | 3 | 3 | 3 | 3 | | | | | | | |
| 18 | U912104000 | BRIDA AMARRE GRIFO 1/2" | TAP FASTENING FLANGE 1/2" | 3 | 3 | 3 | 3 | | | | | | | |
| | Q122032000 | TORNILLO ALLEN M5x15 | ALLEN BOLT M5x15 | 3 | 3 | 3 | 3 | | | | | | | |
| 19 | U025050000 | ENTRADA MINISIT COMPL CG900 | INPUT MINISIT COMPL CG900 | _ | _ | 1 | 1 | | | | | | | |
| | Q306062000 | ARANDELA Ø13,9X10,33x1,5 | WASHER Ø13.9X10.33x1.5 | _ | _ | 8 | 8 | | | | | | | |
| 20 | U025061000 | TUBO COMPLETO EUROSIT QUEM. | COMPLETE PIPE EUROSIT BURN | _ | _ | 1 | 1 | | | | | | | |
| 21 | U202103000 | MANGUITO REDUCCION 1/2-3/8" | REDUCTION HOSE 1/2-3/8" | _ | _ | 2 | 2 | | | | | | | |
| | Q306058000 | ARANDELA 25x17X2.5 | WASHER 25x17X2.5 | _ | _ | 2 | 2 | | | | | | | |
| 22 | U322118000 | PILOTO COMPLETO 100.062 | COMPLETE PILOT LIGHT 100,062 | _ | _ | 1 | 1 | | | | | | | |
| S/Nº | U442137000 | INYECTOR Ø 0,4 GN | INJECTOR Ø 0.4 GN. | _ | _ | 1 | 1 | | | | | | | |
| S/Nº | U562130000 | TERMOPAR L=850 | THERMOCOUPLE L=850 | _ | _ | 1 | 1 | | | | | | | |
| 23 | U134324000 | VALVULA MINISIT 0710.654 | VALVE MINISIT 0710.654 | _ | _ | 1 | 1 | | | | | | | |
| S/Nº | Q307041000 | JUNTA TORICA 25,4x20,2x2,6 | O-RING 25.4x20.2x2.6 | _ | _ | 2 | 2 | | | | | | | |
| S/Nº | U134317000 | MANDO NEGRO MINI 916.124 | BLACK CTRL. MINI 916.124 | _ | _ | 1 | 1 | | | | | | | |
| S/Nº | U134318000 | CUBIERTA MINISIT 903.052 | COVER MINISIT 903.052 | _ | _ | 1 | 1 | | | | | | | |
| S/Nº | Q031322000 | TORNILLO ALOMADO M4x15 | CURVED SCREW M4X15 | _ | _ | 8 | 8 | | | | | | | |
| S/Nº | U264300000 | RACOR 3/8 906,252 | CONNECTION 3/8 906.252 | _ | _ | 2 | 2 | | | | | | | |
| S/Nº | U134323000 | RACORD BICONO 6 958.031 | BICONE CONNECTION 6 958.031 | _ | _ | 1 | 1 | | | | | | | |

| MOD. | COCINAS / RANGES | ZONA / ZONE | PARTE FUNCIONAL / FUNCTIONAL PART | PLANO DIAGRAM | C-2883 |
|---|---|---|---|---|---|

| ITEM | CODIGO REFERENCE | DENOMINACION | DENOMINATION | CGF9-120 I PLUS | CGF9-120 D PLUS | CGF9-121 I PLUS | CGF9-121 D PLUS | | | | | ELIMINADO ELIMINATED | INTRODUCID. INTRODUCED | NOTAS |
|---|---|---|---|---|---|---|---|---|---|---|---|---|---|---|
| 24 | U025062000 | TUBO PILOTO EUROSIT QUEM. | PILOT PIPE EUROSIT BURNER | _ | _ | 1 | 1 | | | | | | | |
| | U134323000 | RACORD BICONO 6 958.031 | BICONE CONNECTION 6 958.031 | _ | _ | 2 | 2 | | | | | | | |
| 25 | Z713035000 | REGLETA 6MM | C6MM STRIP | _ | _ | 1 | 1 | | | | | | | |
| 26 | X163014000 | ENCENDEDOR PARA 2 BUJIAS | LIGHTER FOR 2 PLUGS | _ | _ | 1 | 1 | | | | | | | |
| 27 | T723009000 | PULSADOR SERIE MICRO | MICRO SWITCH SERIES | _ | _ | 1 | 1 | | | | | | | |
| 28 | U963001000 | TREN DE CHISPAS 6 | TRAIN SPARKS 6 | _ | _ | 1 | 1 | | | | | | | |
| 29 | U962683000 | CUADRO ELECTRIC COCINA AD | ELECTRIC KITCHEN TABLE AD | _ | _ | 1 | 1 | | | | | | | |
| S/Nº | U962684000 | TAPA CUADRO ELEC. AD | TABLE TOP ELEC. AD | _ | _ | 1 | 1 | | | | | | | |
| 30 | U215026000 | DISTRIBUIDOR COM. CGF9-120 I | COM. DISTRIBUTOR CGF9-120 I | 1 | _ | _ | _ | | | | | | | |
| 30 | U215024000 | DISTRIBUIDOR COM. CGF9-120D | COM. DISTRIBUTOR CGF9-120 D | _ | 1 | _ | _ | | | | | | | |
| 30 | U205051000 | DISTRIBUIDOR COM. CGF9-121I | COM. DISTRIBUTOR CGF9-121I | _ | _ | 1 | _ | | | | | | | |
| 30 | U205052000 | DISTRIBUIDOR COM. CGF9-121D | COM. DISTRIBUTOR CGF9-121D | _ | _ | _ | 1 | | | | | | | |
| | Q221342000 | REMACHE EXAGONAL M5 | HEXAGONAL RIVET M5 | 1 | 1 | 1 | 1 | | | | | | | |
| | Q152004000 | TORNIL, APLASTADO M5x13 A304 | FLAT HEADED BOLT M5x13 A304 | 2 | 2 | 1 | 1 | | | | | | | |
| | U635008000 | TUERCA CIEGA 3/4 | BLIND NUT 3/4 | 2 | 2 | _ | _ | | | | | | | |
| | Q306051000 | ARANDELA TAPON Ø23,5x3 | LID WASHER Ø23.5x3 | 2 | 2 | _ | _ | | | | | | | |
| 31 | Z713035000 | REGLETA 6MM | C6MM STRIP | 1 | 1 | _ | _ | | | | | | | |
| 32 | U963001000 | TREN DE CHISPAS 6 | TRAIN SPARKS 6 | 1 | 1 | _ | _ | | | | | | | |
| 33 | U962669000 | CAJA TREN CHISPA SOLD AD | TRAIN SPARK BOX SOLD AD | 1 | 1 | _ | _ | | | | | 31,10,11 | | |
| 33 | 12038838 | CAJA TREN CHISPA CG AD | TRAIN SPARK BOX CG AD | 1 | 1 | _ | _ | | | | | | 31,10,11 | |
| | Q012031000 | TORNILLO EXAGONAL M5x10 | HEXAGONAL BOLT M5x10 | 2 | 2 | _ | _ | | | | | | | |

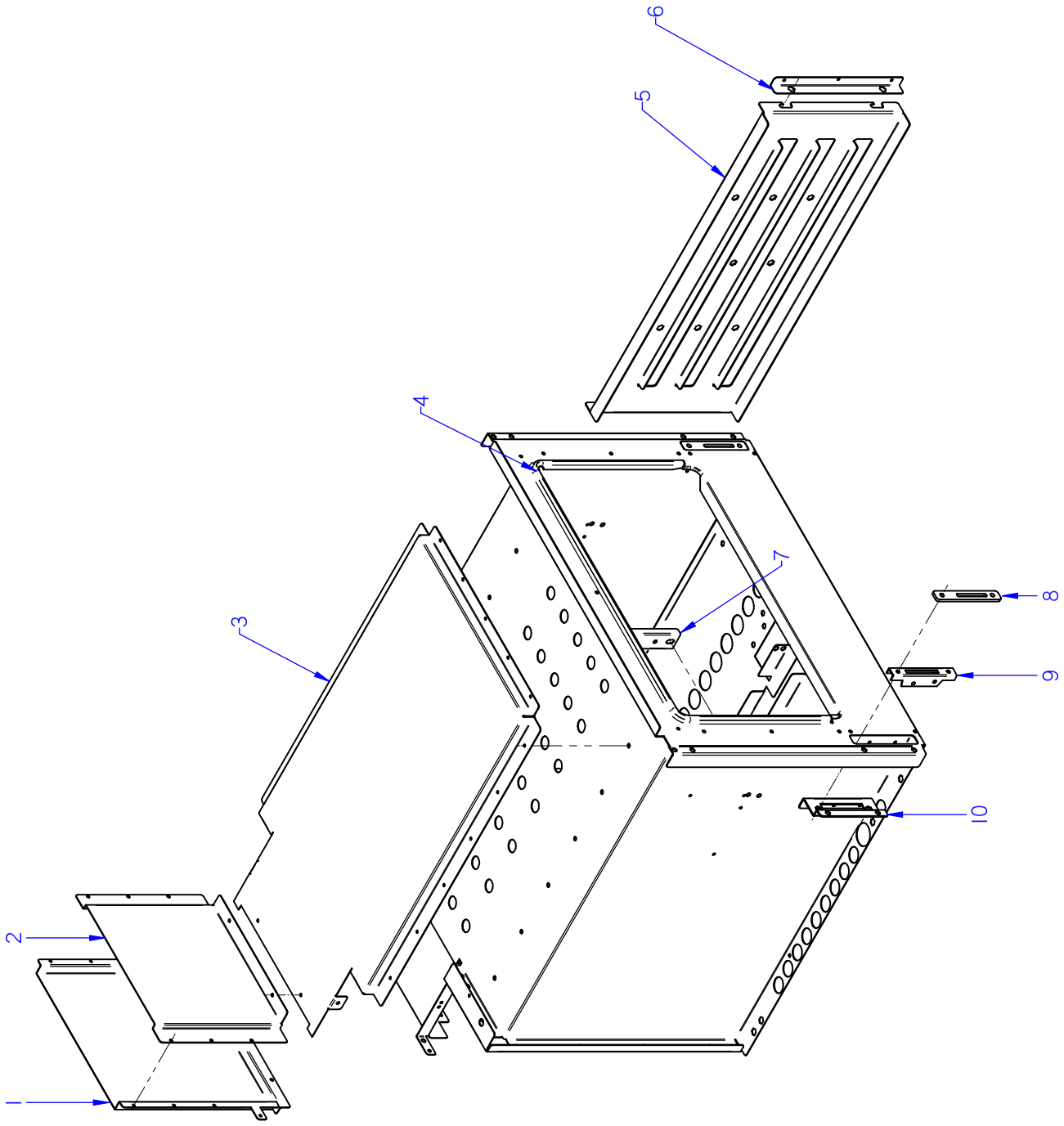


ITEM MARCADO EN COLOR = REPUESTO RECOMENDADO
COLOURED ITEM = RECOMMENDED SPARE PART

| Nº plano / N º plane | Firma | Fecha / Date | Denominación / Denomination: HORNO / OVEN | Lamina / Sheet | |
|---|---|---|---|---|---|
| C-2884 | | 2011-10 | COCINA CGF9-121 PLUS | 5 | Fagor Industrial S.Coop. FAGOR Onate |

| MOD. | COCINAS / RANGES | ZONA / ZONE | HORNO / OVEN | PLANO DIAGRAM | C-2884 |
|---|---|---|---|---|---|

| ITEM | CODIGO REFERENCE | DENOMINACION | DENOMINATION | CGF9-121 PLUS | | | | | | | | ELIMINADO ELIMINATED | INTRODUCID. INTRODUCED | NOTAS |
|---|---|---|---|---|---|---|---|---|---|---|---|---|---|---|
| 1 | U965604000 | POSTERIOR CHIMENEA AD | REAR FLUEPIPE AD | 1 | | | | | | | | | | |
| | Q419005000 | REMACHE 4x8 ALMG3 / ALUMINIO | RIVET 4X8 ALMG3 / ALUMINIUM | 14 | | | | | | | | | | |
| 2 | U965603000 | CHIMENEA ANTERIOR AD | FRONT FLUEPIPE AD | 1 | | | | | | | | | | |
| 3 | U965602000 | CAMARA DE HUMOS AD | SMOKE CHAMBER AD | 1 | | | | | | | | | | |
| | Q419005000 | REMACHE 4x8 ALMG3 / ALUMINIO | RIVET 4X8 ALMG3 / ALUMINIUM | 19 | | | | | | | | | | |
| 4 | U965613000 | JUNTA HORNO FIBRA DE VIDRIO | FURNACE FIBERGLASS BOARD | 1 | | | | | | | | | | |
| 5 | U915607000 | GUIA LATERAL HORNO G700 | OVEN SIDE GUIDE G700 | 2 | | | | | | | | | | |
| | Q151336000 | TORNILLO SOPORTE GUIAS | GUIDE SUPPORT BOLT | 4 | | | | | | | | | | |
| | Q302022000 | ARANDELA 16X6X1.2 A.304 | WASHER 16X6X1.2 A.304 | 4 | | | | | | | | | | |
| | Q221321000 | REMACHE ROSCAD.NUTSERT.M6 | THREADED RIVET .NUTSERT.M6 | 4 | | | | | | | | | | |
| 6 | U915616000 | SUPLEMENTO AMARRE GUIA LAT. | SIDE GUIDE FAST. SUPPL. | 2 | | | | | | | | | | |
| | Q412000000 | REMACHE TUBULAR 4x8 | TUBULAR RIVET 4x8 | 6 | | | | | | | | | | |
| 7 | U055644000 | FIJACION BULBO | FASTENING BULB | 1 | | | | | | | | | | |
| | Q412000000 | REMACHE TUBULAR 4x8 | TUBULAR RIVET 4x8 | 2 | | | | | | | | | | |
| 8 | U915619000 | EMBELLECED GUIA BISAGRA | HINGE GUIDE TRIM | 2 | | | | | | | | | | |
| | Q152045000 | TORNILLO AMARRE M6X25 | FASTENING BOLT M6X25 | 4 | | | | | | | | | | |
| 9 | U010512000 | GUIA DE BISAGRA | HINGE GUIDE | 2 | | | | | | | | 12.12.11 | | |
| 9 | 12041846 | GUIA BISAGRA G700 Y G900 | HINGE GUIDE G700 Y G900 | 2 | | | | | | | | | 12.12.11 | |
| 10 | U915604000 | AMARRE GUIA BISAGRA HORNO | OVEN HINGE GUIDE FASTENING | 2 | | | | | | | | | | |
| | Q221342000 | REMACHE EXAGONAL M5 | HEXAGONAL RIVET M5 | 2 | | | | | | | | | | |
| | Q412000000 | REMACHE TUBULAR 4x8 | TUBULAR RIVET 4x8 | 6 | | | | | | | | | | |
| | Q222042000 | REMACHE EXAGONAL ROSCA M6 | HEXAGONAL RIVET THREAD M6 | 4 | | | | | | | | | | |
| | | | | | | | | | | | | | | |
| | | | | | | | | | | | | | | |
| | | | | | | | | | | | | | | |
| | | | | | | | | | | | | | | |
| | | | | | | | | | | | | | | |
| | | | | | | | | | | | | | | |
| | | | | | | | | | | | | | | |
| | | | | | | | | | | | | | | |
| | | | | | | | | | | | | | | |

| MOD. | COCINAS / RANGES | ZONA / ZONE | VARIOS / MISCELLANEOUS | PLANO DIAGRAM | |
|---|---|---|---|---|---|

| ITEM | CODIGO REFERENCE | DENOMINACION | DENOMINATION | CGF9-120 I PLUS | CGF9-120 D PLUS | CGF9-121 I PLUS | CGF9-121 D PLUS | | | | | ELIMINADO ELIMINATED | INTRODUCID. INTRODUCED | NOTAS |
|---|---|---|---|---|---|---|---|---|---|---|---|---|---|---|
| | U026508000 | FOLLETO DE INSTRUCIONES CG | INSTRUCTION LEAFLET CG | 1 | 1 | 1 | 1 | | | | | | | |
| | U023001000 | ESQUEMA TEORICO ADHESIVO AD | THEOR. DIAGRAM LABEL AD | 1 | 1 | 1 | 1 | | | | | | | PLANO HB-80558 |
| | 12008537 | CABLE. ENCENDEDOR ENCIMERA | TOP LIGHTER WIRING | _ | 1 | _ | _ | | | | | | | |
| | 12008908 | CABLE BUJIA-1º,2º FUEGO:CG9-41 | WIRING PLUG-1º,2º FIRE: CG9-41 | _ | 1 | _ | _ | | | | | 27,09,12 | | |
| | 12008908 | CABLE BUJIA-1º,2º FUEGO:CG9-41 | WIRING PLUG-1º,2º FIRE: CG9-41 | 3 | _ | 2 | _ | | | | | | | |
| | 12008747 | CABLE BUJIA-1º FUEGO:CG9-41 | WIRING PLUG-1º FIRE: CG9-41 | _ | 1 | 1 | _ | | | | | | 27,09,12 | |
| | 12009058 | CABLE BUJIA-4º FUEGO:CG9-41 | WIRING PLUG-4 º FIRE: CG9-41 | _ | _ | _ | 3 | | | | | | 27,09,12 | |
| | 12023746 | CABLE ALIMENTACION | POWER WIRING | _ | 1 | 1 | 1 | | | | | | | |
| | 12009080 | CABLEADO ENCENDEDOR HORNO | OVEN LIGHTER WIRING | 1 | _ | 1 | 1 | | | | | | | |
| | 12009072 | CABLEADO ENCENDEDOR HORNO | OVEN LIGHTER WIRING | _ | _ | 1 | 1 | | | | | | | |
| | U333003000 | CABLE MASA ENCENDEDOR | LIGHTER EARTH CABLE | 1 | 2 | 1 | 1 | | | | | 27,09,12 | | |
| | 12024296 | CABLEADO ENCENDEDOR BUJIA | PLUG LIGHTER WIRING | 1 | 2 | 1 | 1 | | | | | | 27,09,12 | |

| MOD. | COCINAS / RANGES | ZONA / ZONE | REPUESTOS RECOMENDADOS<br>RECOMMENDED SPARE PART | PLANO<br>DIAGRAM | |
|---|---|---|---|---|---|

| ITEM | CODIGO REFERENCE | DENOMINACION | DENOMINATION | CGF9-120 PLUS | CGF9-121 PLUS | | | | | | | ELIMINADO ELIMINATED | INTRODUCID. INTRODUCED | NOTAS |
|---|---|---|---|---|---|---|---|---|---|---|---|---|---|---|
| 24 | U020528000 | BISAGRA CIERRE HORNO | OVEN LOCK HINGE | _ | 2 | | | | | | | | | C-2881 |
| 1 | U192104000 | PILOTO COMPLETO | COMPLETE PILOT LIGHT | 1 | 1 | | | | | | | | | C-2883 |
| S/Nº | U222130000 | TERMOPAR L=600 | THERMOCOUPLE L=600 | 1 | 1 | | | | | | | | | C-2883 |
| S/Nº | U442137000 | INYECTOR Ø 0,4 GN | INJECTOR Ø 0.4 GN. | 1 | 1 | | | | | | | | | C-2883 |
| S/Nº | X022131000 | BUJIA | SPARK PLUG | 1 | 1 | | | | | | | | | C-2883 |
| 6 | U942102000 | GRIFO 18700 BY-PASS 1,20 | TAP 18700 BY-PASS 1,20 | 1 | 1 | | | | | | | | | C-2883 |
| 7 | T723009000 | PULSADOR SERIE MICRO | MICRO SWITCH SERIES | 1 | 1 | | | | | | | | | C-2883 |
| 13 | U962109000 | PILOTO COMPLETO | S140(0140028) PILOT UNIT | 2 | 2 | | | | | | | | | C-2883 |
| S/Nº | 12041740 | INYECTOR LPG | INJECTOR LPG | 2 | 2 | | | | | | | | 23,11,11 | C-2883 |
| S/Nº | U962106000 | INYECTOR NG | INJECTOR NG | 2 | 2 | | | | | | | | | C-2883 |
| S/Nº | U962101000 | TERMOPAR 1500 | THERMOCOUPLE 1500 | 1 | 1 | | | | | | | | | C-2883 |
| S/Nº | U962102000 | TERMOPAR 600 | THERMOCOUPLE 600 | 1 | 1 | | | | | | | | | C-2883 |
| S/Nº | X012101000 | BUJIA 915.037 | SPARK PLUG | 2 | 2 | | | | | | | | | C-2883 |
| S/Nº | S312107000 | MANGUITO TUBO PILOTO | PILOT PIPE HOSE | 2 | 2 | | | | | | | | | C-2883 |
| 16 | U912115000 | GRIFO 18700 BY-PASS 0,75 | TAP 18700 BY-PASS 0.75 | 1 | 1 | | | | | | | | | C-2883 |
| 16 | U912109000 | GRIFO 18700 BY-PASS 1,15 | TAP 18700 BY-PASS 1.15 | 1 | 1 | | | | | | | | | C-2883 |
| 22 | U322118000 | PILOTO COMPLETO 100.062 | COMPLETE PILOT LIGHT 100,062 | _ | 1 | | | | | | | | | C-2883 |
| S/Nº | U442137000 | INYECTOR Ø 0,4 GN | INJECTOR Ø 0.4 GN. | _ | 1 | | | | | | | | | C-2883 |
| S/Nº | U562130000 | TERMOPAR L=850 | THERMOCOUPLE L=850 | _ | 1 | | | | | | | | | C-2883 |
| 23 | U134324000 | VALVULA MINISIT 0710.654 | VALVE MINISIT 0710.654 | _ | 1 | | | | | | | | | C-2883 |
| S/Nº | Q307041000 | JUNTA TORICA 25,4x20,2x2,6 | O-RING 25.4x20.2x2.6 | _ | 2 | | | | | | | | | C-2883 |
| S/Nº | U134317000 | MANDO NEGRO MINI 916.124 | BLACK CTRL. MINI 916.124 | _ | 1 | | | | | | | | | C-2883 |
| S/Nº | U134318000 | CUBIERTA MINISIT 903.052 | COVER MINISIT 903.052 | _ | 1 | | | | | | | | | C-2883 |
| 26 | X163014000 | ENCENDEDOR PARA 2 BUJIAS | LIGHTER FOR 2 PLUGS | _ | 1 | | | | | | | | | C-2883 |
| 27 | T723009000 | PULSADOR SERIE MICRO | MICRO SWITCH SERIES | _ | 1 | | | | | | | | | C-2883 |
| 28 | U963001000 | TREN DE CHISPAS 6 | TRAIN SPARKS 6 | _ | 1 | | | | | | | | | C-2883 |
| 32 | U963001000 | TREN DE CHISPAS 6 | TRAIN SPARKS 6 | 1 | _ | | | | | | | | | C-2883 |
| 4 | U965613000 | JUNTA HORNO FIBRA DE VIDRIO | FURNACE FIBERGLASS BOARD | _ | 1 | | | | | | | | | C-2884 |
| 9 | 12041846 | GUIA BISAGRA G700 Y G900 | HINGE GUIDE G700 Y G900 | _ | 2 | | | | | | | | 12.12.11 | C-2884 |
| | | | | | | | | | | | | | | |
| | | | | | | | | | | | | | | |

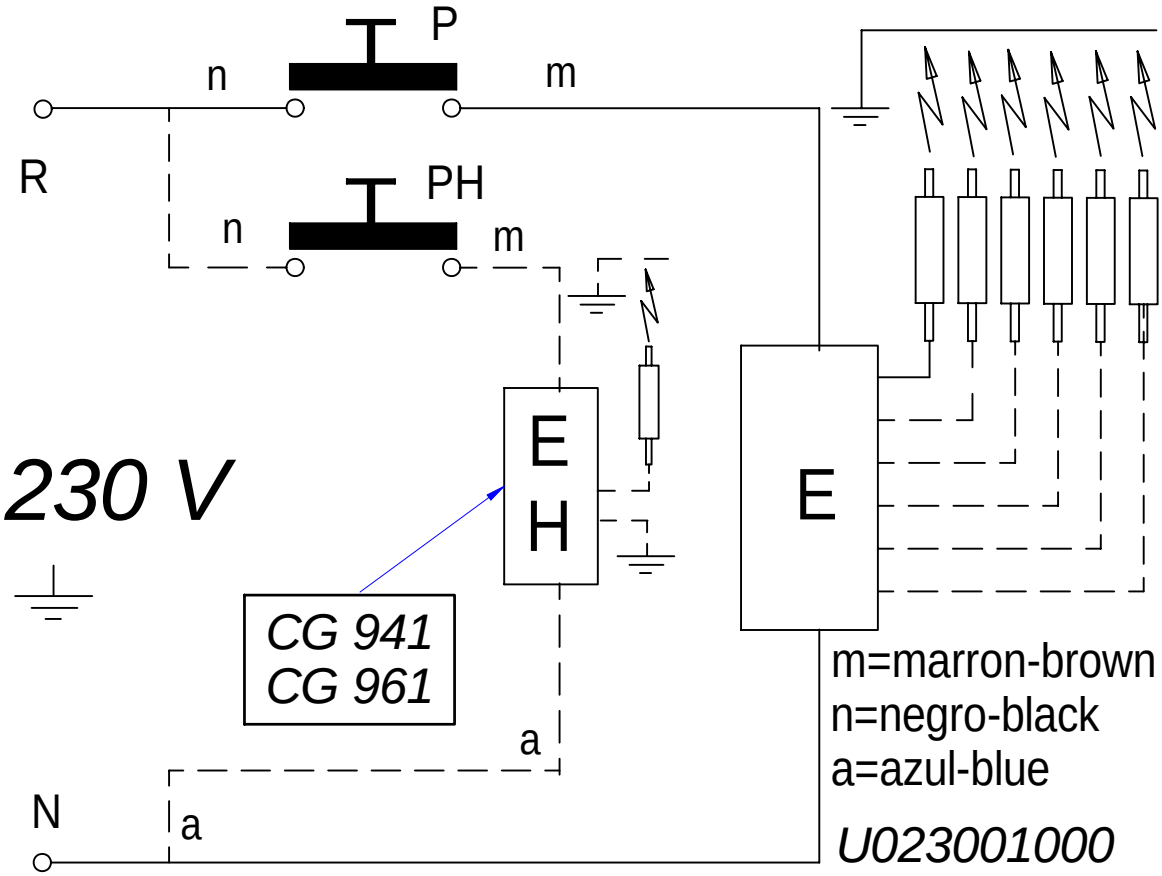


| - | Eskema teorikoa: ADVANCE | - | - | U023001000 | - |
|---|---|---|---|---|---|
| Zk./Nº | Pieza | Cant. | Materiala/Material | Klas. zk/Nº Clas. | Gainazal akabera/Tratamiento |
| Zk./Nº | Aldaketa/Modificaciones | | Nork proposatua/Propuesta de | Data/Fecha | Perdoi orokorrak<br>Tolerancias generales |
| - | - | | - | - | |
| - | - | | - | - | < 5 ± 0.2 / 50 ÷ 100 ± 0.8 |
| - | - | | - | - | 5 ÷ 25 ± 0.4 / >100 ± 1 |
| - | - | | - | - | 25 ÷ 50 ± 0.6 / α ± 1 |
| - | - | | - | - | |

| | Sinadura/Firma | Data/Fecha | | Gainazal perdoia<br>Mecanizado superficial |
|---|---|---|---|---|
| Marraztua/Dibujado | **e.carrascal** | **2008-11-25** | FAGOR<br>Fagor Industrial,Koop.Elk, Mugatua | — |
| Proiektatua/Proyectado | **e.carrascal** | **2008-11-25** | | |
| Egiaztatua/Comprobado | I.Alberdi | **2008-11-25** | | |

| Eskala/Escala | EGOSKETA | Plano Zk./Plano Nº |
|---|---|---|
| - | | HB-80558 |
| | | - Zk. ord. du |
| | Plano hau ezin daiteke erabili, ez berriztatu, gure baimenik gabe. | - Zk.gaitik ord. |