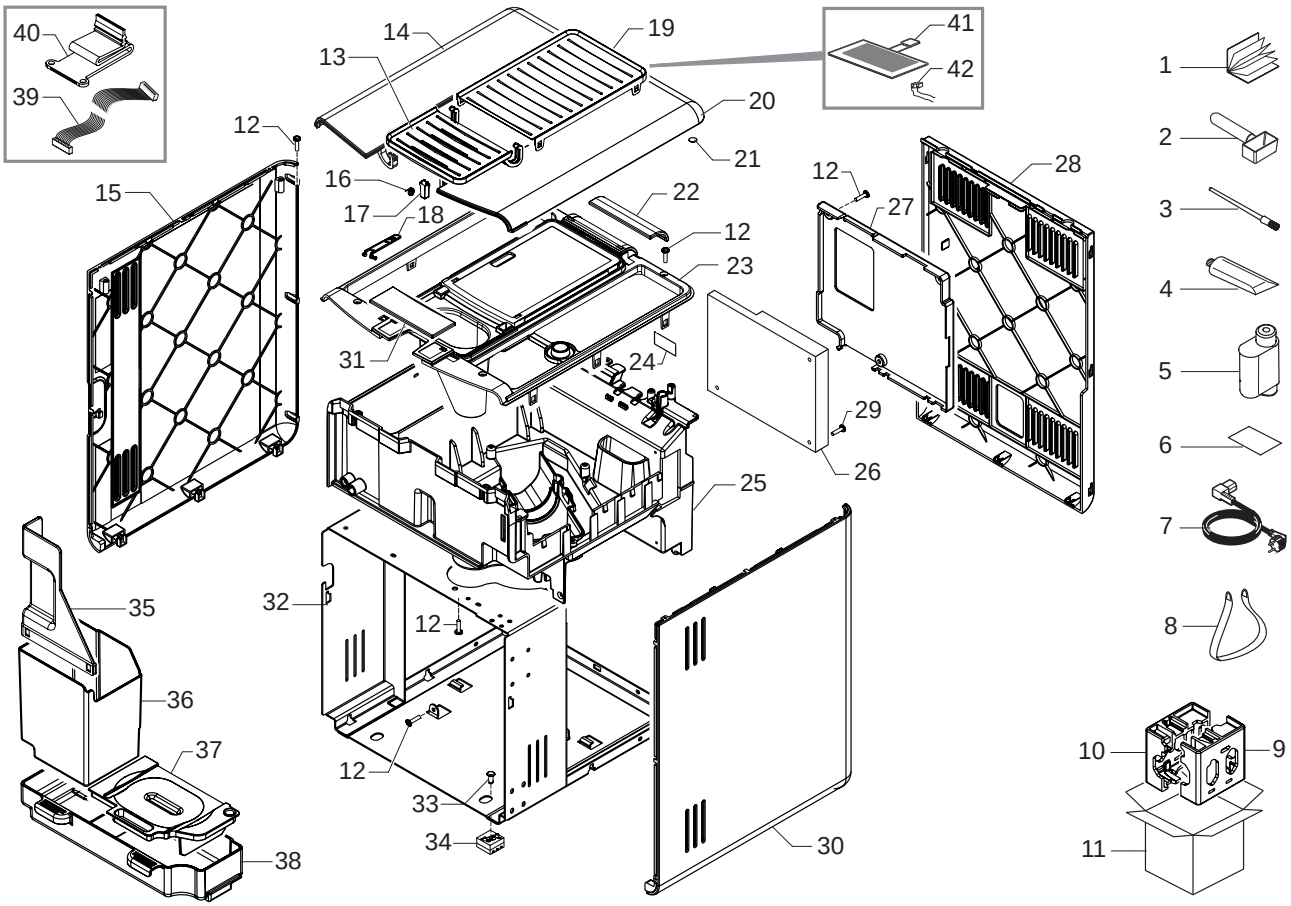

Saeco INTERNATIONAL GROUP **SUP038**

CE

Cod.10003051-52-53-3250-51-52
Cod.10003278-79-3311-12-13-14-15

POS	CODE	DESCRIPTION	NOTE
01	15001792	MANUAL SAE SUP038 MYB9/H D/I	
	15001793	MANUAL SAE SUP038 MYB9/H GB/F	
	15001794	MANUAL SAE SUP038 MYB9/H E/P	
	15001795	MANUAL SAE SUP038 MYB9/H NL/PL	
	15001934	MANUAL SAE SUP038 MYB9/H CHN	
02	146680850	BLACK COFFEE MEASURE SMART	
03	127390100	BRUSH FOR CLEANING	
04	11005044	SAECO KLUBER TRIBOSTAR SIL 2 TUBE 5GR.	
05	21000961	ACC SAE BRITA WATER FILTER 1 UNIT EUR	
	21001120	ACC SAE BRITA WATER FILTER 1UNIT AMERICA	
06	0301.961	STICKER FOR WATER HARDNESS TEST	
07	183911050	BLACK POWER CABLE SCHUKO L=1200	
	183930650	PO.CABL.CH BLACK 3X1 H05VV-F L=1200	
	183921950	POWER CABLE SJT3 USA BLACK UL L=1200	
	183940650	BLACK POWER CABLE AUSTRALIA L=1200	
	11001985	BLACK POWER CABLE KOREA 3X1 L=1200	
	11004246	BLACK POWER CABLE TAIWAN HVCTF L=1200	
	11004247	BLACK POWER CABLE RVV 3X1 CHINA L=1200	
08	13001097	BAND FOR LIFTING L=1800 H=300 MM MYB9	
09	13000922	PS-E RIGHT INSERT FOR BOX MYB9/H-P	
10	13000921	PS-E LEFT INSERT FOR BOX MYB9/H-P	
11	13000920	DISPLAY BOX MYB9/H SAECO XELSIS SS	
	13001110	DISPLAY BOX MYB9/H SAECO XELSIS CLASS	
12	129912504	SCREW TCBR TORX 10 3,5X14 PLAST.ZN-N	
13	11013210	SB/SS GROUND CONT.DOOR COVER MYB9 AS.	
14	11013148	SB/SS WATER CONT.DOOR COVER MYB9 AS.	
	11013284	BLACK WATER CONT.DOOR COVER MYB9 AS.	
	11013302	WHITE WATER CONT.DOOR COVER MYB9 AS.	
15	11013167	SB/SS LEFT SIDE PANEL MYB9/T-H ASSY.	
	11013272	BLACK LEFT SIDE PANEL MYB9/T-H ASSY.	
	11013295	WHITE LEFT SIDE PANEL MYB9/T-H ASSY.	
16	11022426	SS SPRING FOR WATER CONT. LEVER MYB9	
17	12001263	BLACK PUSH-PUSH MYB90	
18	11022425	YELLOW LEVER FOR WATER CONT.S/SC.MYB9	
19	11012859	SB/SS CUP WARMING LID MYB9	
20	11013149	SB/SS BEAN CONTAIN.DOOR COVER MYB9 AS.	
	11013287	BLACK BEAN CONT.DOOR COVER MYB9 AS.	
	11013304	WHITE BEAN CONT.DOOR COVER MYB9 AS.	
21	12001330	TRANSPAR.ROUND ADHESIVE FOOT SJ-5382	
22	11022809	SB/SS REAR COVER CASING INS.MYB9 ASSY.	
	11022821	BLACK REAR COVER CASING INS.MYB9 ASSY.	
	11022820	WHITE REAR COVER CASING INS.MYB9 ASSY.	
23	11021447	BLACK COVER CASING MYB9/T-H	

POS	CODE	DESCRIPTION	NOTE
24	11000651	WATER LEVEL SENSOR BOARD P124	
25	11014017	BLACK HORIZONTAL MOUNT. PLATE MYB9 AS	
26	11012018	PWR BOARD MYB9	230V
	11021342	PWR BOARD MYB9	120V
27	11012035	BLACK PWR BOARD COVER MYB9	
28	11013065	BLACK REAR PANEL WHIT LOGO SAECO MYB9	
29	12000450	SCREW TCBR TORX 10 3,5X12 PLAST.ZN-N	
30	11013166	SB/SS RIGHT SIDE PANEL MYB9/T-H ASSY.	
	11013259	BLACK RIGHT SIDE PANEL MYB9/T-H ASSY.	
	11013293	WHITE RIGHT SIDE PANEL MYB9/T-H ASSY.	
31	11022805	SB/SS FRONT COVER CASING INS.MYB9/H AS.	
	11022807	BLACK FRONT COVER CASING INS.MYB9/H AS.	
	11022806	WHITE FRONT COVER CASING INS.MYB9/H AS.	
32	11013170	BLACK STEEL CASING MYB9 ASSY.	
33	11021769	BLACK RIGID FOOT FIXING PIN MYB9	
34	11021829	BLACK/WHITE RIGID FOOT MYB9	
35	11022527	BLACK DUMP BOX PROTECTION MYB9	
36	11013595	BLACK DUMP BOX MYB9 ASSY.	
37	11022169	BLK DRIP TRAY COFF.BREW UNIT COVER MYB9	
38	11012777	BLACK DRIP TRAY COFFEE BREW UNIT MYB9	
39	11013128	40POLES FLAT CABLE BOARDS LINK MYB9 UL	
40	11013806	BLACK FLAT-CABLE COVER MYB9	
41	WGA4316031000	ADESIVE HEATING-ELEMENT 230V	
42	11008844	2POLES CONN.SUPPLY CUPWARMING G0053UL	

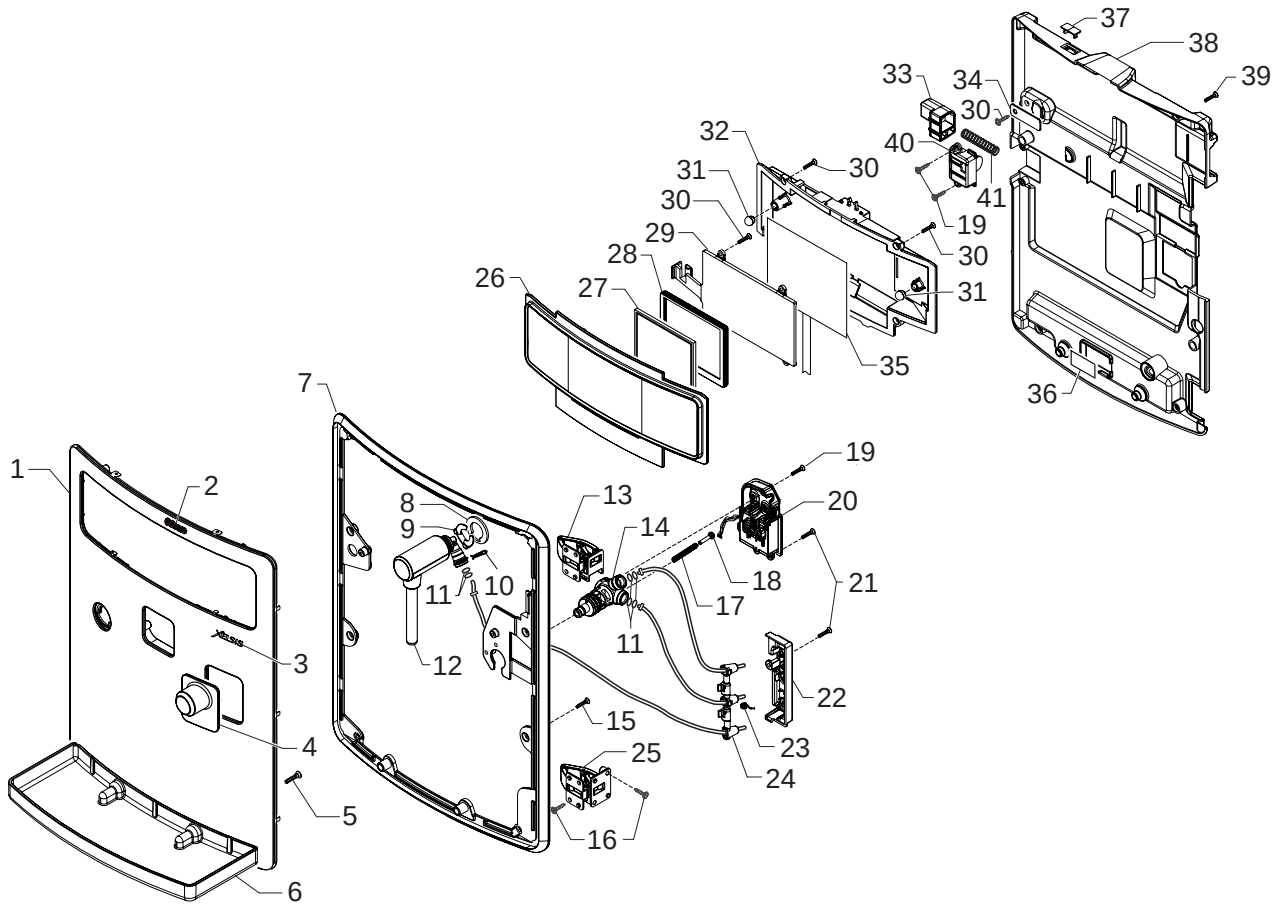

Saeco INTERNATIONAL GROUP **SUP038**

CE

Cod.10003051-52-53-3250-51-52
Cod.10003278-79-3311-12-13-14-15

POS	CODE	DESCRIPTION	NOTE
01	11022728	SB/SS FRONTAL PANEL MYB9 ASSY.	
	11013277	BLACK FRONTAL PANEL S/SCREEN MYB9 AS.	
	11013298	WHITE FRONTAL PANEL S/SCREEN MYB9 AS.	
02	11011406	ADHES.SILVER PLATE LOGO SAECO P0057	
03	11022725	ADHES.SILVER PLATE LOGO XELSIS	
04	11021449	CHROMED CONN.CAP FOR CARAFE MYB9 AS.	
05	12001369	SCREW TSP TORX 10 5X35 PLAST.SS	
06	11012831	BLACK DRIP TRAY SUPPORT MYB9/H-P	
07	11013143	CHROMED ZAMA FRONT FRAME MYB9	
08	11001624	STEAM TUBE WASHER P0049	
09	NF11.084	FOLK SPRING	
10	9011.144	SS FORK FOR TUBE D.4	
11	140328059	OR 2015 IN SILICONE PTFE/FDA	
12	11013244	TF/CHROM.STEAM TUBE MYB9 ASSY.	
13	11013215	DOOR UPPER HINGE MYB9	
14	11022860	BLACK CONNECTOR V2 FOR CARAFE MYB9	
15	12001430	SCREW TCBR TORX 20 4X10 PLAST.SS	
16	129573221	SCREW TCB PH/TT 4X8 UNI 8112 SS	
17	11022870	STEEL SPRING FOR CARAFE CONNECT. MYB9	
18	11022853	BRASS INSE. FOR SPRING CARAFE CON.MYB9	
19	12000450	SCREW TCBR TORX 10 3,5X12 PLAST.ZN-N	
20	11014015	BLK CARAFFE BOARD SUPP. GEN.MYB9 AS.	
21	12001431	SCREW TCB TORX 10 3X12 PLAST.SS	
22	11013784	BLACK TEFLON TUBES SUPP. COVER MYB9	
23	11013785	TEFLON TUBES SUPPORT SPRING MYB9	
24	11021692	PREFORMED TEFLON TUBES SUPP. MYB9 AS.	
25	11013216	DOOR LOWER HINGE MYB9	
26	11013241	BLACK FRONT PLATE DISPLAY MYB9/T-H ASSY.	
27	12001261	DISPLAY 320x240 NO TOUCH BRIGHTN.+MYB9	
28	11013226	BLACK DISPLAY SEAL MYB9/T-H	
29	11012889	BLACK DISPLAY SUPPORT MYB9/T-H	
30	129913202	SCREW TCB TORX 10 3X8 PLAST.ZN-B	
31	149450588	65SH SILICONE BOILER SEALING VALVE	
32	11012377	BLACK CPU BOARD COVER MYB9/T-H	
33	11014215	BLACK BUTTON FOR DOOR RELEASE MYB9	
34	11021976	GALV.PLATE FOR DOOR CLOSURE MYB9	
35	11013196	CPU+SW MYB9/T-H ASSY.	
36	11000651	WATER LEVEL SENSOR BOARD P124	
37	11001339	TRANSPARENT INFRAREDS PLATE P0049	
38	11022583	BLK INSID.COVER FRON.PANEL S/SCR.MYB9/H	
39	129912521	SCREW TCBR TORX 10 3,5X14 PLAST.SS	
40	11014218	BLACK COVER BUTT. FOR DOOR RELEA.MYB9	
41	11021747	SPRING FOR DOOR RELEASE BUTTON MYB9	

POS	CODE	DESCRIPTION	NOTE

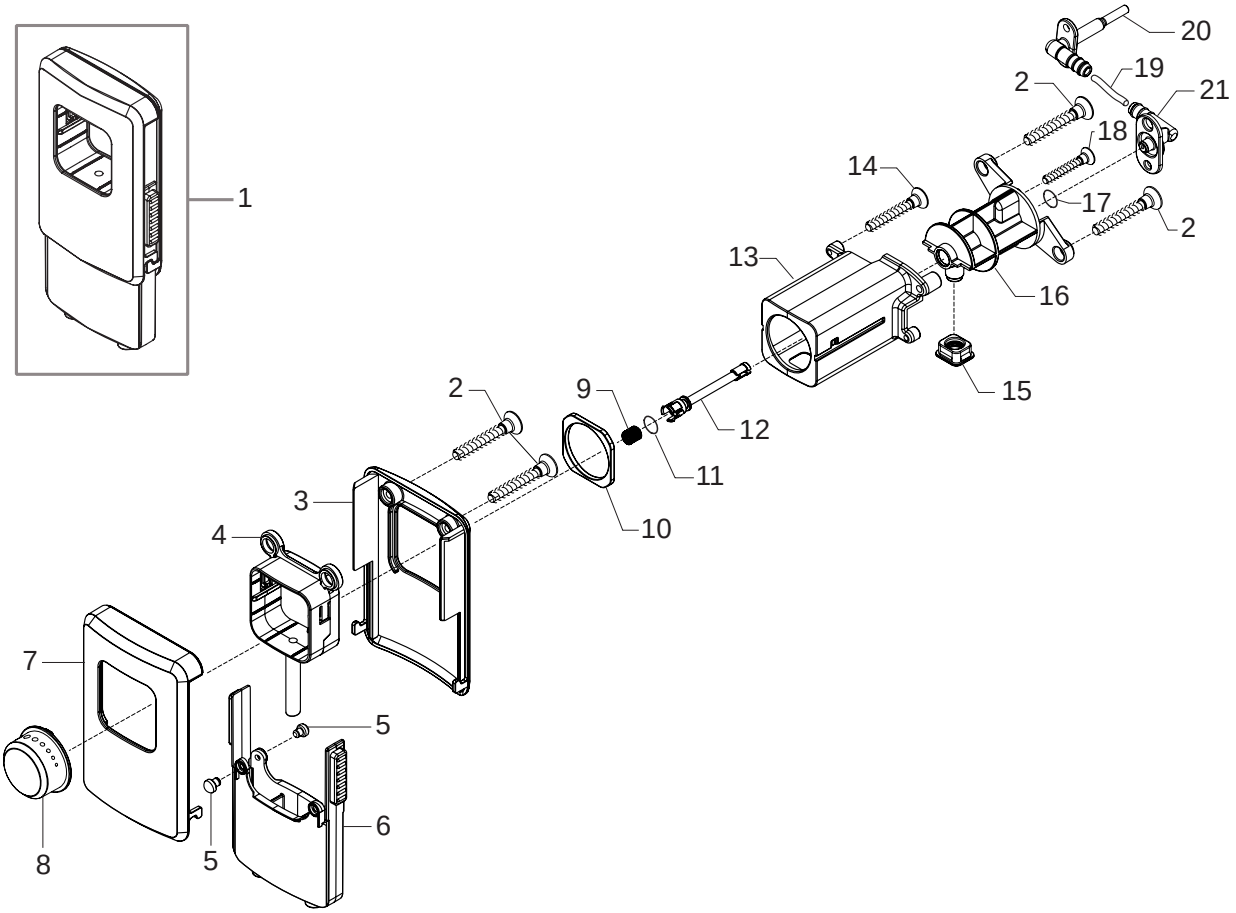

Saeco INTERNATIONAL GROUP

SUP038

CE

Cod.10003051-52-53-3250-51-52
Cod.10003278-79-3311-12-13-14-15

POS	CODE	DESCRIPTION	NOTE
01	11013182	CHROM.COFFEE DISPENSER MYB9 ASSY. WITH PART. N° 02 - 03 - 04 - 05 - 06 - 07	
02	129570721	SCREW TCB TORX 10 M3X8 AUTOFORMING SS	
03	11013001	BLACK REAR COVER COFF. DISPENSER MYB9	
04	11013003	BLACK INNER BODY COFFEE DISPENS.MYB9	
05	11013085	WHITE COFFEE DISPENSER SLIDER MYB9	
06	11013002	BLACK COF.DISPENS. EXT.MOBILE PART MYB9	
07	11013222	CHROM.FRONT COFF. DISPENS. COVER MYB9	
08	11022128	CHROMED CREAM ADJUST.KNOB S/SCR.MYB9	
09	126772518	SS.SPRING FOR COF.CREAM ADJUSTM.SHAFT	
10	11013324	BLACK CREAM ADJUSTM. KNOB RING MYB9	
11	140326661	BLACK OR METRIC 0040-20 IN EPDM	
12	140640200	WHITE COFFEE CREAM ADJUSTMENT SHAFT	
13	11013323	CHROM.COFFEE DISPENSER SUPPORT MYB9	
14	12000897	SCREW TCB TORX 10 3,5X20 PLAST.SS	
15	11013072	BLACK SEAL FOR COFFEE DISPENSER MYB9	
16	11013013	BLACK COFFEE DISPENSER TUBE MYB9	
17	12000070	OR METRIC 0060-15 IN SILICONE	
18	12000450	SCREW TCBR TORX 10 3,5X12 PLAST.ZN-N	
19	149360200	SILICONE TUBE 5X8 70SR IN ROLL	
20	11013364	BLACK DISPENSER COFF.INLET CONN.MYB9	
21	11012926	BLACK COFFEE DISPENSER CONNECT. MYB9	

POS	CODE	DESCRIPTION	NOTE

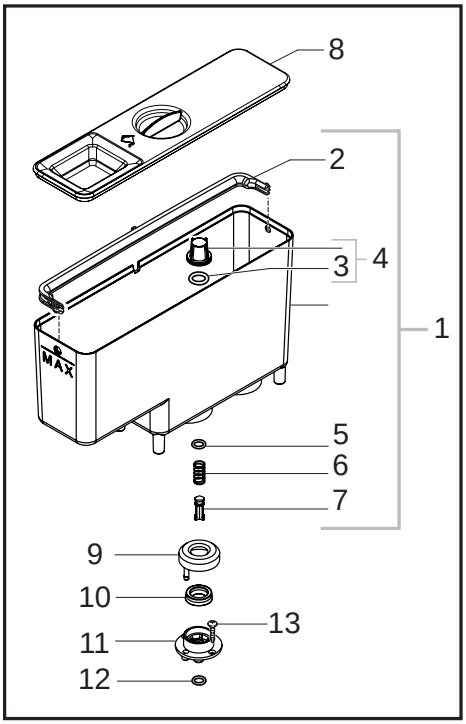

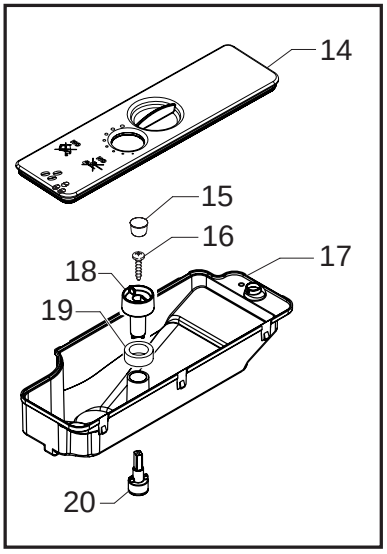

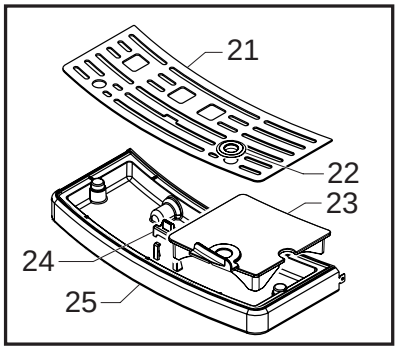

Saeco INTERNATIONAL GROUP **SUP038**

CE

Cod.10003051-52-53-3250-51-52
Cod.10003278-79-3311-12-13-14-15

POS	CODE	DESCRIPTION	NOTE
01	11013212	NATURAL/GREY WATER CONTAINER MYB9 AS.	
02	11012738	BLACK HANDLE WATER CONTAINER LID MYB9	
03	140328461	EPDM OR METRIC 0190-10	
04	224640200	EXTERNAL FILTER FOR WATER CONTAIN. AS.	
05	140324362	OR METRIC 0060-30 IN SILICONE	
06	126764718	SPRING FOR WATER CONTAINER VALVE	
07	147660562	GREY WATER VALVE CONTAINER PISTON	
08	11022127	NAT/GREY WATER CONTAIN. LID S/SCR.MYB9	
09	0701.031.150	SEAL COVER GREY	
10	145842900	WATER CONTAIN.VALVE SEAL GACO DIM14	
11	0701.014.150	SEAL CONTAINER GREY	
12	140320461	OR ORM 0080-20 IN TERMOIL	
13	129535721	SCREW TSP TORX 10 3,5X9,5 SHEET SS	
14	11013325	NAT/GREY BEAN COFF.CONTAIN.LID MYB9 AS.	
15	149213059	GREY CAP FOR KNOBS BEAN CONTAINER	
16	129913902	SCREW TCB TORX 10 3X12 PLAST.ZN-B	
17	11012853	BLACK BEAN CONTAINER MYB9	
18	11012852	BLACK GRIND.ADJUSTMENT KNOB MBY9	
19	11022528	WASHER FOR GRIND.ADJUSTM. KNOB MBY9	
20	145897300	INSERT GRINDING ADJUSTM.KNOB SMART	
21	11022803	SS DRIP TRAY GRATE V2 MYB9/H-P	
22	11022084	BLACK GRATE SEAL MYB9/H-P	
23	11022802	BLACK DRIP TRAY COVER V2 MYB9/H-P	
24	11005388	RED FLOAT FOR DRIP TRAY P124	
25	11013214	SB/SS-BLACK DRIP TRAY MYB9/H-P ASSY.	
	11013281	BLACK/BLACK DRIP TRAY MYB9/H-P ASSY.	
	11013300	WHITE/BLACK DRIP TRAY MYB9/H-P ASSY.	

POS	CODE	DESCRIPTION	NOTE

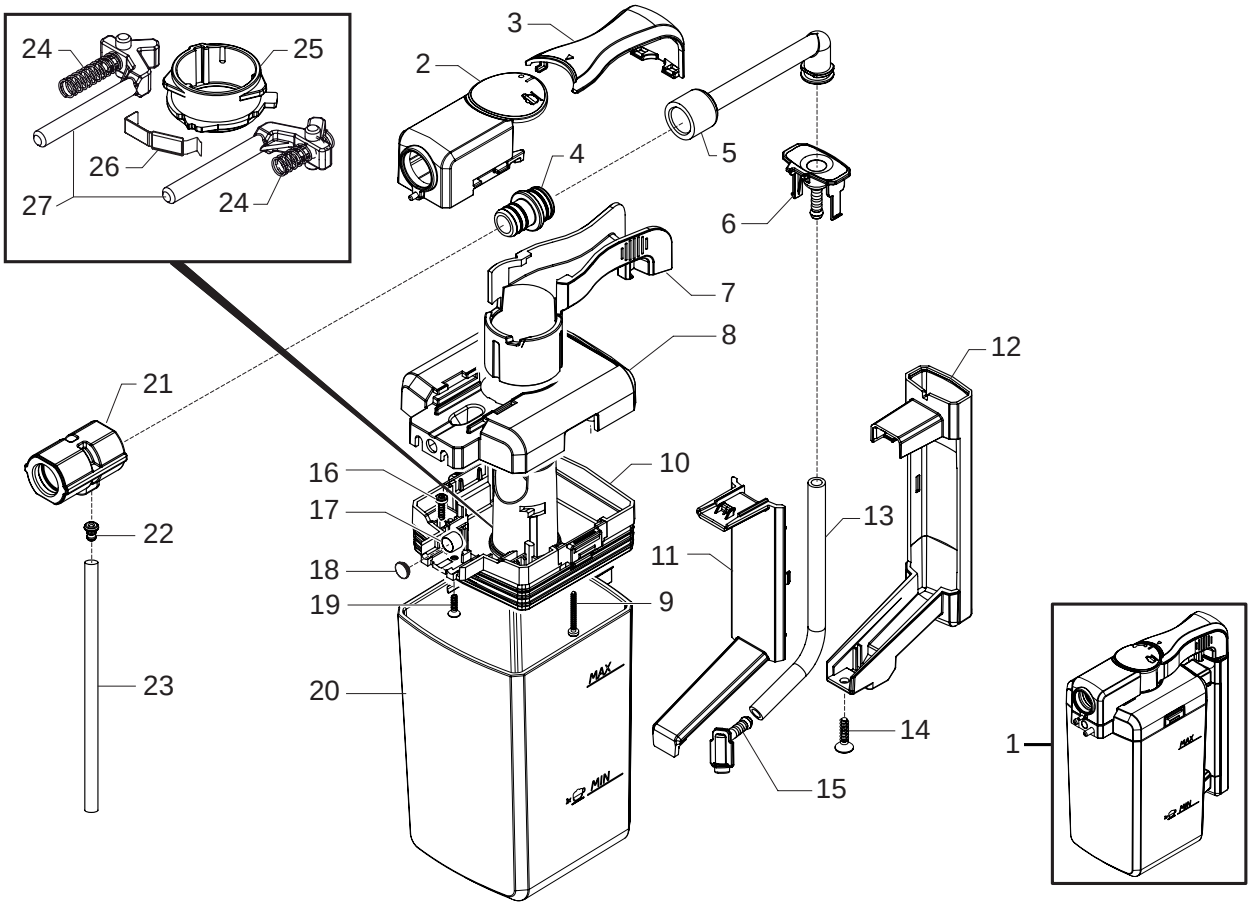

Saeco INTERNATIONAL GROUP **SUP038**

CE

Cod.10003051-52-53-3250-51-52
Cod.10003278-79-3311-12-13-14-15

POS	CODE	DESCRIPTION	NOTE
01	11012845	TRANSPAR/BLACK GENER. CARAFE MYB9 AS.	
02	11021984	CHROM.CARAFE CAPP.COVER S/SC.MYB9 AS.	
03	11022498	CHR.UPPER CARAFE SUPP. V2 S/SCR.MYB9	
04	11012812	VENTURI TUBE FOR CAPPUCCINATORE MYB9	
05	11012678	BLACK CARAFE MILK DISPENSER TUBE MYB9	
06	11013163	BLACK UPPER TUBE CARAFE CONNECT.MYB9	
07	11022496	CHROM.LOWER CARAFE SUPPORT V2 MYB9	
08	11012816	BLACK UPPER COVER PART CARAFE MYB9	
09	12000550	SCREW TCB TORX 10 3X25 PLAST.SS	
10	11021893	BLACK LOWER COV. PART CARAFE MYB9 AS.	
11	11013466	CHROMED REAR PART HILT CARAFE MYB9	
12	11013465	CHROMED FRONT PART HILT CARAFE MYB9	
13	149360200	SILICONE TUBE 5X8 70SR IN ROLL	
14	129911721	SCREW TSP TORX 4X16 PLAST STEEL	
15	11013164	BLACK LOWER TUBE CARAFE CONNEC.MYB9	
16	129910921	SCREW TCB TORX 10 3X10 SS	
17	9161.111	MAGNET FOR FLOAT SUPERAUTOM.	
18	11014016	SS.INSERT FOR MAGNET MYB9	
19	12000895	SCREW TSP TORX 10 3X10 PLAST.SS	
20	11022357	TRANSP.CARAFE S/SCREEN MYB9	
21	11012677	BLACK CARAFE CAPPUCCINAT. CASING MYB9	
22	11012813	BLACK MILK TUBE CONNECTOR MYB9	
23	149360400	TRANSPARENT SILCONE TUBE 3,5X6 IN ROLL	
24	11013765	STEEL SPRING FOR CARAFE LEVER MYB9	
25	11022522	BLACK CAM FOR CARAFE LEVERS V2 MYB9	
26	11013832	CARAFE SPRING WITH INSERT MYB9 ASSY.	
27	11012818	BLACK LEVER FOR CARAFE CAM MYB9	

POS	CODE	DESCRIPTION	NOTE

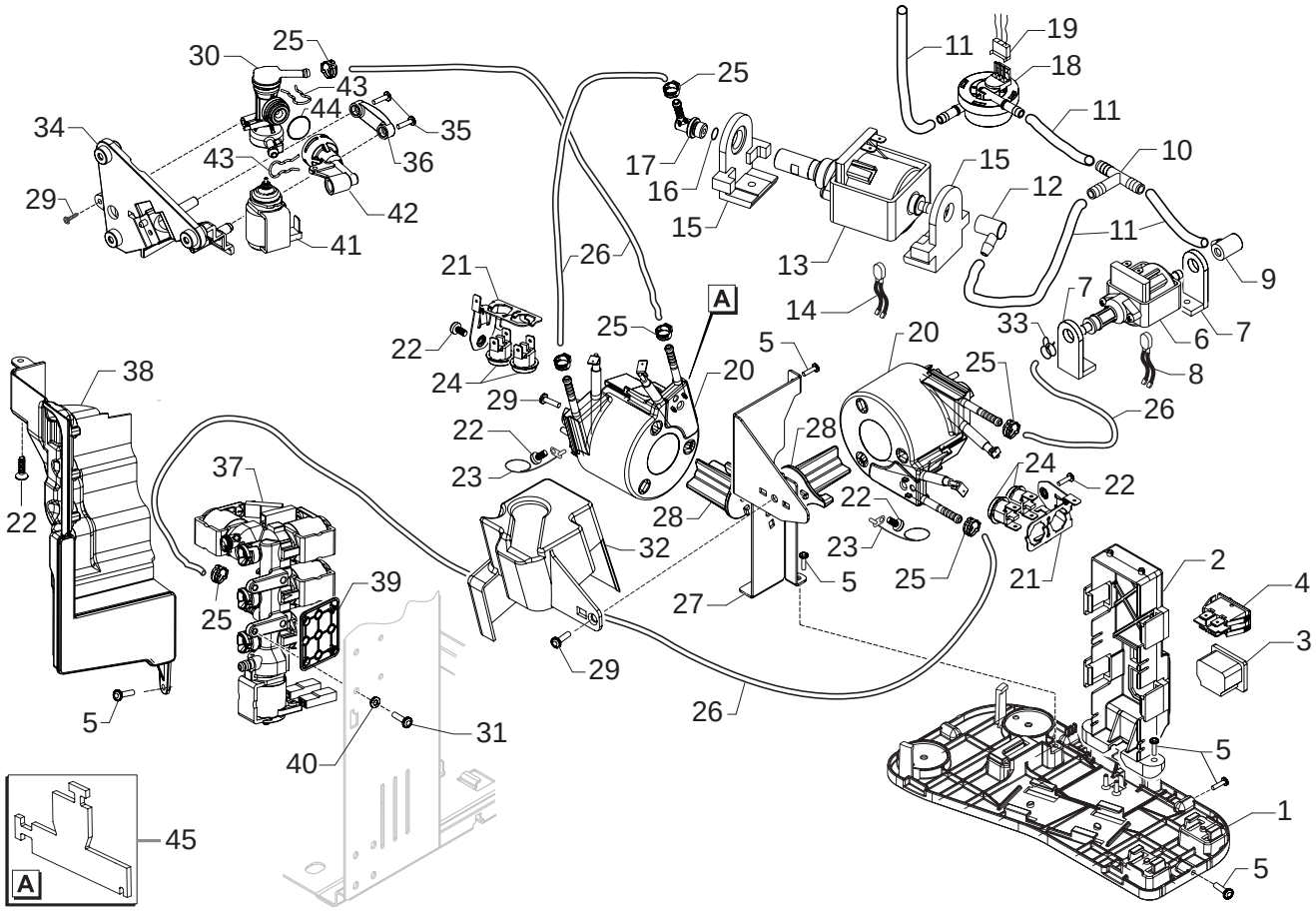

Saeco INTERNATIONAL GROUP **SUP038**

Cod.10003051-52-53-3250-51-52
Cod.10003278-79-3311-12-13-14-15

POS	CODE	DESCRIPTION	NOTE
01	11012205	BLACK COMPONENTS SUPPORT MYB9	
02	11012412	BLACK SOCKET-SWITCH SUPPORT MYB9	
03	12000280	CUP SOCKET EN 60320 C 13	
04	NE03.038	BIPOLAR SWITCH FUSIT C1250AR	
05	129912504	SCREW TCBR TORX 10 3,5X14 PLAST.ZN-N	
06	12001212	ULKA PUMP MF	230V-50HZ
	12001346	ULKA PUMP MF	120V-60HZ
	12001348	ULKA PUMP MF	220V-50/60HZ
07	11012194	BLACK ULKA MF PUMP SUPPORT	
08	11013116	2POLES CONNECTOR STEAM PUMP MYB9 UL	
09	11012193	90° INLET CONNECTOR FOR PUMP ULKA MF	
10	147920300	TEE CONNECTOR D=8 ART.80.26.047 KA.461	
11	JS01.022	SILICONE TUBE 5X10 60 SHORE IN ROLL	
12	147920150	90° INLET CONNECTOR PUMP	
13	12000140	ULKA PUMP EP5/S GW	230V-50HZ
	12000142	ULKA PUMP EAP5/S	120V-60HZ
	12000182	ULKA PUMP EP5/S GW	220V-60HZ
14	11013076	2POLES CONNECTOR COFFEE PUMP MYB9 UL	
15	11022857	BLACK PUMP SUPPORT GMYB	
16	140321961	OR 2031 IN TERMOIL	
17	11001054	90°CONNECTOR PUMP OUTLET P0049/B	
18	12000781	TURBINE D=1,2 932-8521/90 ASSY.	
19	11013122	6POLES CONNECTOR FLOWMETER MYB9 UL	
20	11011341	V4 TUB.BOILER ASSY.	230V-1300W
	11005608	V3 TUB.BOILER ASSY.	120V-1300W
21	11007907	THERMOSTATES SPRING FOR BOILER	
22	129573202	SCREW TCB TORX 20 M4X8 AUTOFORM. ZN-B	
23	190800100	TEMPERATURE SENSOR NTC UL L=280MM	
24	189428600	THERMOSTAT 175° 1NT-08L-5125	
25	12000892	OETIKER CLAMP D=9,5 16700004	
26	16000380	5X8,9 SILICONE TUBE IN ROLL	
27	11013034	STEEL TUBOL.BOILER SUPPORT MYB9	
28	11012214	BLACK BOILERS SUPPORT MYB9	
29	12001280	SCREW TSP TORX 10 5X20 PLAST.ZN-B	
30	20006558	BLOWDOWN VALVE CASING MYB9 ASSY.	
31	129914302	SCREW TORX M4X10 TESTA D=8X1,5 GALV	
32	11022428	BLK COFFEE BOILER INSULATIN. COVER MYB9	
33	184320200	SPRING HOSE CLAMP D=9,5MM	
34	11012206	BLACK BLOWDOWN VALVE SUPPORT MYB9	
35	129913902	SCREW TCB TORX 10 3X12 PLAST.ZN-B	
36	11013711	BLACK VALVE FIXING FLANGE MYB9	
37	11013165	DIFFUSER VALVE MYB9 ASSY.	
38	11013528	BLACK DIFFUSER PROTECT.VALVE MYB9 ASSY.	

POS	CODE	DESCRIPTION	NOTE
39	11021841	SOLENOID VALVE CONNEC.INSUL.PLATE MYB9	
40	11021842	SOLENOID VALVE CONN.INSUL.WASHER MYB9	
41	20000590	BLOWDOWN VALVE COIL P0049 ASSY.	230V
	20000680	BLOWDOWN VALVE COIL P0049 ASSY.	120V
	20000920	BLOWDOWN VALVE COIL P0049 AS.	220V-60HZ
42	11007565	BLOWDOWN VALVE CONNECTOR V2 P0049	
43	11005096	FORK SPRING FOR VALVE P0049	
44	12000620	OR ORM 0130-20 IN EPDM	
45	11021450	TUB.BOILER STD C1 INSULATING	
	11006995	V2 BLOWDOWN VALVE MYB9 230V ASSY.	
	11022038	V2 BLOWDOWN VALVE MYB9 120V ASSY.	
	11021989	V2 BLOWDOWN VALVE MYB9 220V-60HZ ASSY.	
		WITH PART. N°30-41-42-43-44	
	11009776	TUB.BOILER STD C1 1300W 230V ASSY.	
	11009778	TUB.BOILER STD C1 1300W 120V ASSY.	
		WITH PART. N°20-21-22-23-24	

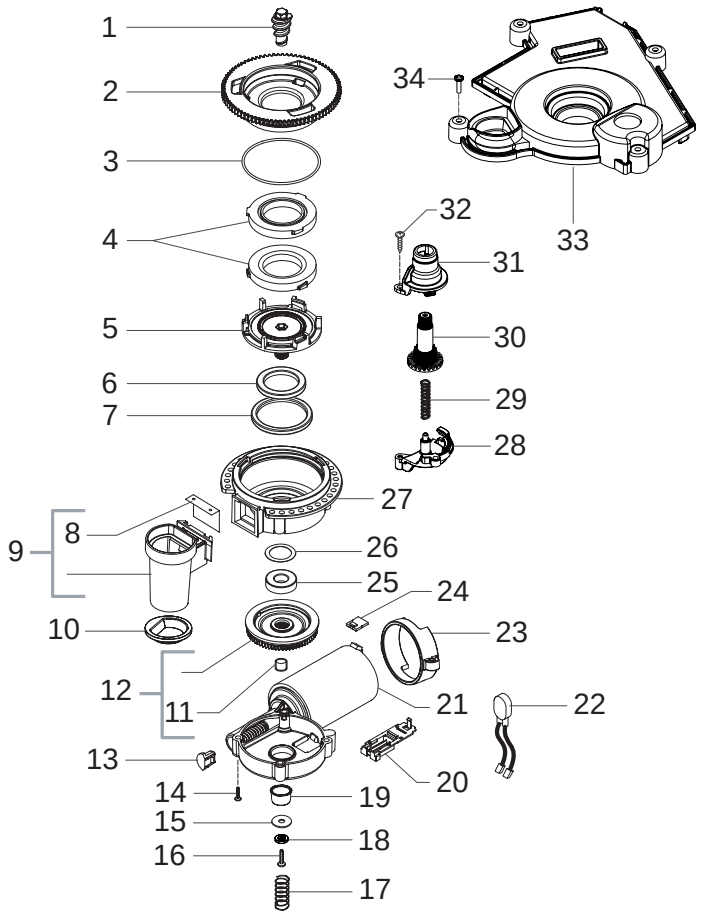

Saeco INTERNATIONAL GROUP **SUP038**

Cod.10003051-52-53-3250-51-52
Cod.10003278-79-3311-12-13-14-15

POS	CODE	DESCRIPTION	NOTE
01	11011205	TEA/ZAMA INCREASE SCREW GRINDER	
02	149198250	UPPER GRINDER SUPPORT COFFEEGRINDER	
03	140328960	NBR FDA OR METRIC 0530-15	
04	146520100	BAKED CLAY GRINDER 48X28	
05	149198350	LOWER GRINDER SUPPORT COFFEEGRINDER	
06	123030300	AXIAL BEARING EKKO 342.35252	
07	140360500	FELT RING 45,4X39,4X4	
08	129024921	SS.BRACKET FOR COFFEE OUTLET CONVEYOR	
09	11012564	GROUND COFFEE OUTLET CONVEYOR V2 ASSY.	
10	145854462	GROUND COFFEE CONT.SEAL LOWER SMART1	
11	122100300	MAGNET FOR TURB. FAN	
12	226000300	GEAR SX Z=38 FOR GRINDER MOTION ASSY.	
13	149214800	CAP FOR WORM SCREW MC/V3 CENTRING	
14	129661702	SCREW TCB TORX 3,5X30 PLAST.ZN-B	
15	128381902	GALVAN.FLAT WASH.DI=4,3 DE=14 SP=1,5	
16	129574802	SCREW TCB TORX 20 M4X30 ZN-B	
17	11000597	COFFEE GRINDER SUPPORT SPRING P124	
18	128310402	GALV.WASHER UNI 8842 A4	
19	11002873	INSULATOR BUSH FOR GRINDER MOTOR P124	
20	149199050	SENSOR SUPPORT FOR COFF.GRIND.MOTOR	
21	11000513	MOTOR COFFEEGRINDER/V3.1 ASSY	230V
	11000511	MOTOR COFFEEGRINDER/V3.1 ASSY	120V
22	11013079	2POLES CONNECT. GRINDER MOTOR MYB9 UL	
23	11000194	BLACK GRINDER MOTOR SUPPORT P124	
24	181540900	ELECTRONIC BOARD WITH SENSOR HAL506	
25	123030200	RADIAL BEARING 61900.2RS1	
26	128381800	CRINKLE WASHER 21,8X15,8X0,2	
27	142905450	UPPER BODY WITH COFFE.GROUND OUTLET	
28	149199850	LOWER GEAR SUPP. COFFEEGRINDER SMART	
29	126772918	SPRING FOR ADJUSTMENT GRINDING GEAR	
30	146002150	COFFEE GRINDING ADJUSTMENT GEAR SMART	
31	149199750	UPPER GEAR SUPP. COFFEEGRINDER SMART	
32	129914002	SCREW TCB TORX 10 3,5X16 PLAST.ZN-B	
33	11012856	SOUNDPROOF. COVER FOR COF.GRIND. MYB9	
34	129912504	SCREW TCBR TORX 10 3,5X14 PLAST.ZN-N	
	11013147	GENERAL MOTOR MC MYB9 230V ASSY.	
	11022036	GENERAL MOTOR MC MYB9 120V ASSY.	

POS	CODE	DESCRIPTION	NOTE

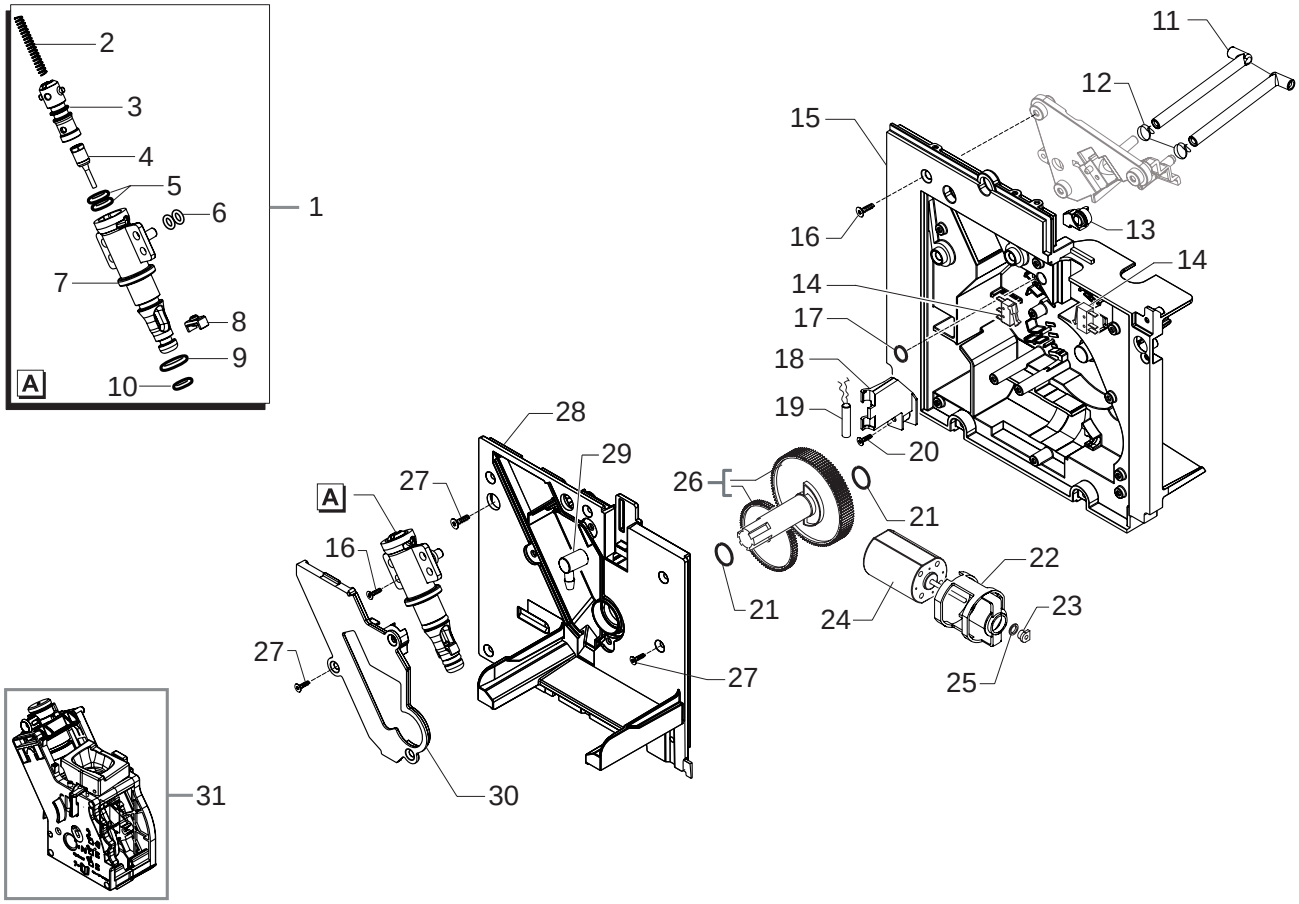

Saeco INTERNATIONAL GROUP **SUP038**

Cod.10003051-52-53-3250-51-52
Cod.10003278-79-3311-12-13-14-15

POS	CODE	DESCRIPTION	NOTE
01	11005060	PIN V2 FOR BOILER P119 ASSY.	
02	9011.132	SPRING FOR PIN	
03	11003820	CAP V2 FOR PIN BOILER P119	
04	11009019	TEA/BRASS PISTON L=20,9 ASSY.	
05	140324459	OR ORM 0060-20 IN SILICONE PTFE/FDA	
06	140328059	OR 2015 IN SILICONE PTFE/FDA	
07	11003801	NATURAL PIN V2 FOR BOILER P119	
08	11005099	NATURAL CURSOR V2 FOR BOILER P119	
09	NM01.035	OR ORM 0090-20 SILICONE	
10	NM01.057	OR ORM 0050-20 IN SILICONE	
11	11012337	WATER DRAIN CONNECTOR MYB9	
12	NV99.087	BAND D=11/11,6	
13	11013514	BLACK COVER MOUNTING PLATE SEAL MYB9	
14	NE05.038	MICROSWITCH	
15	227533550	BLACK MOUNTING PLATE WITH PIN P119 ASSY.	
16	129912504	SCREW TCBR TORX 10 3,5X14 PLAST.ZN-N	
17	140325462	OR METRIC 0070-20 IN SILICONE	
18	11012976	BLACK SENSOR SUPPORT MYB9	
19	11003661	REED SENSOR MK3-1A66-BV16451	
20	129913902	SCREW TCB TORX 10 3X12 PLAST.ZN-B	
21	9161.132	MYLAR WASHER FOR RATIOMOTOR	
22	9121.044	ANTIVIBRATION FOR MOTOR	
23	9121.046	SINTERED BUSH FOR MOTOR	
24	11003037	MOTOR FOR RATIOMOTOR ASSY.	
25	148380200	WASHER BAKELIZZATE D=5,5	
26	20000900	SPARES KIT GEARS FOR RATIOMOTOR V2	
27	129914102	SCREW TSP TORX 10 3,5X12 PLAST.ZN-B	
28	11013513	BLACK COVER MOUNTING PLATE MYB9	
29	147920150	90° INLET CONNECTOR PUMP	
30	142856550	BLACK COVER FOR VAIN BOILER P119	
31	11012810	BLACK BREW UNIT 8GR.SBS MYB9	
		SEE COD. EXPL. E90071	

POS	CODE	DESCRIPTION	NOTE