DESPIECE TECNICO

Hornos Mixtos a Gas con Caldera
Fours Mixtes á Gaz avec Chaudière
Gas Combi Ovens with Steam Generator
Gas-HeiBluftdämpfer
Forno Misti con Boiler a Gas

Modelos:

HGP-10/21

Julio 2007 July

Fagor Industrial

HGP 10/21

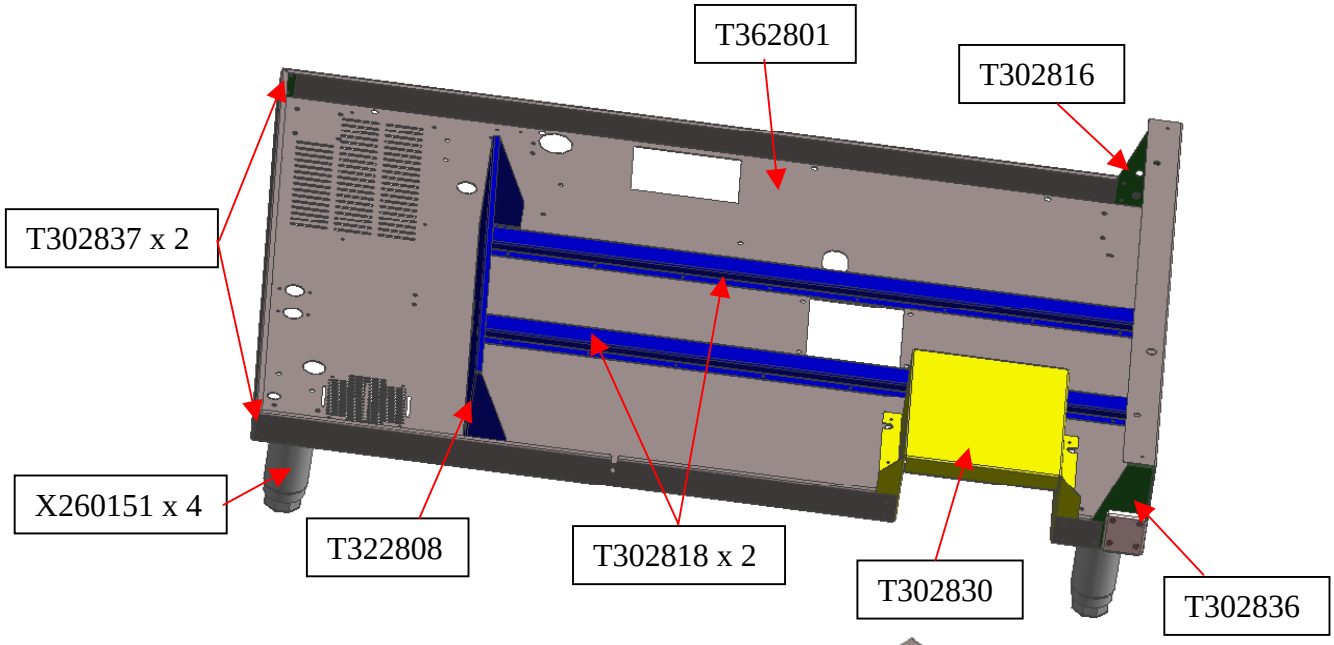

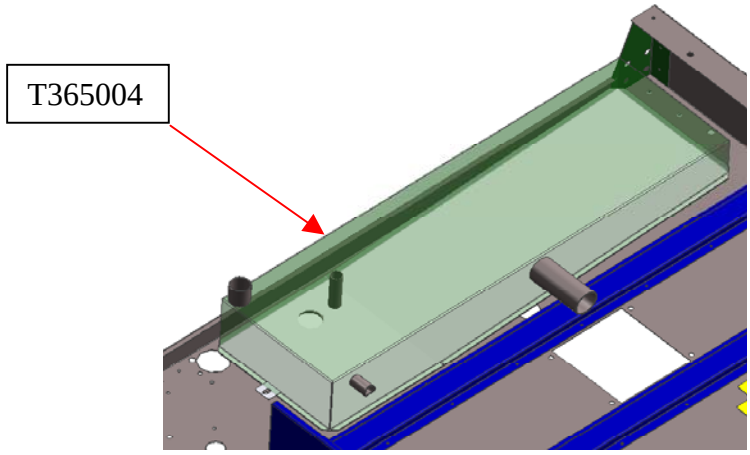

HGP Washing system wiring
T333009

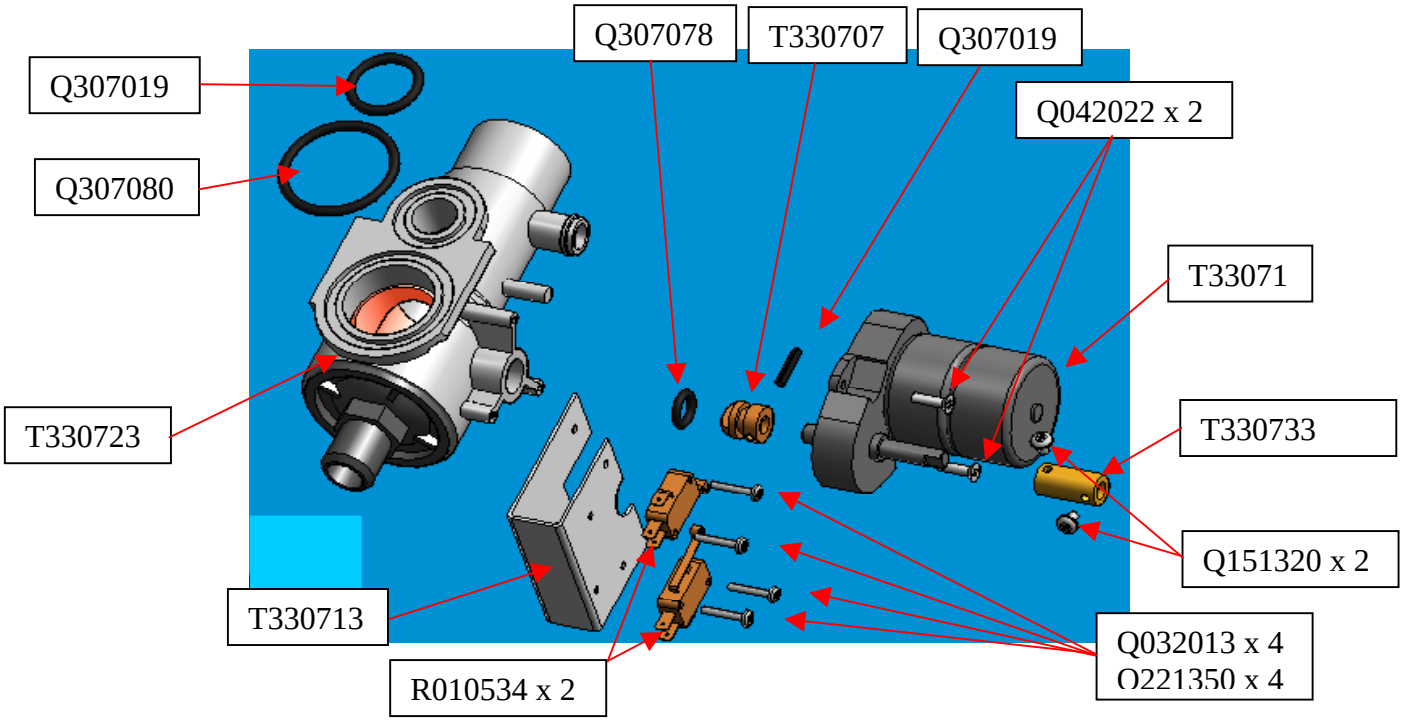

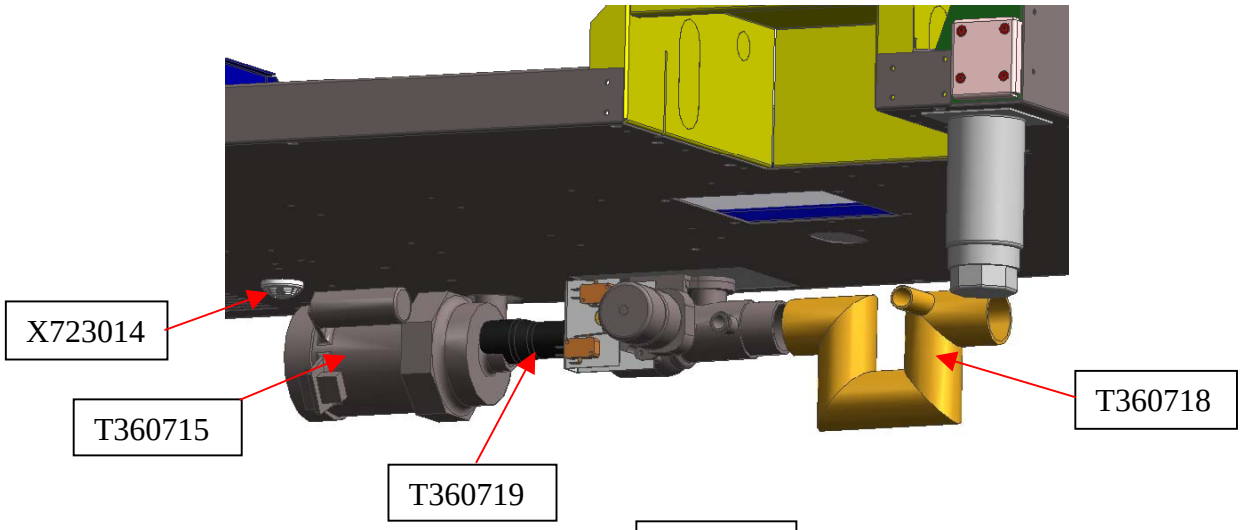
X723014
T360715
T360719
T360718

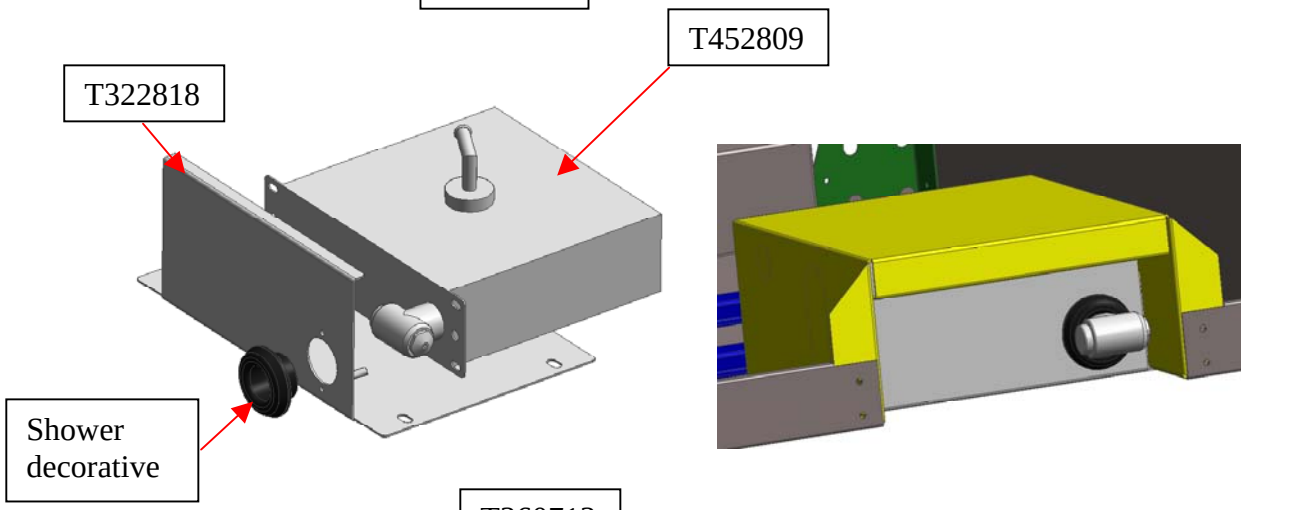
T452809
T322818
Shower decorative

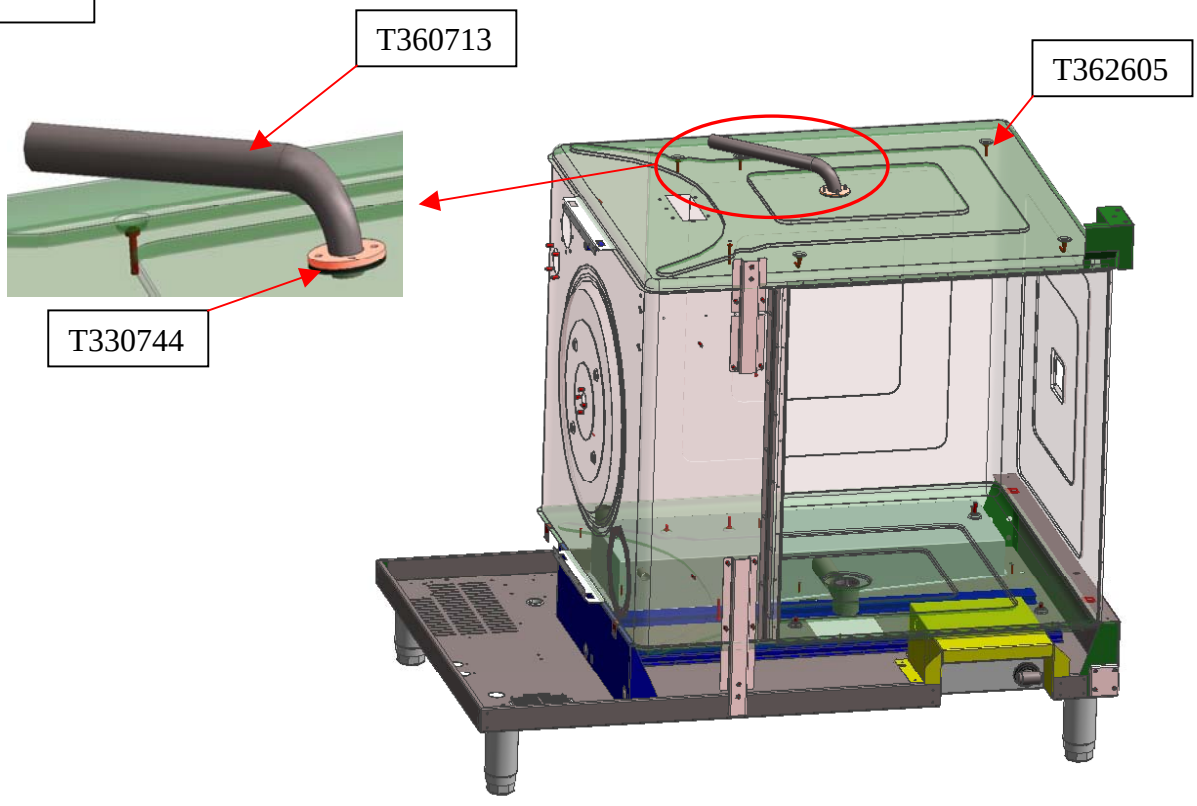
T360713
T362605
T330744

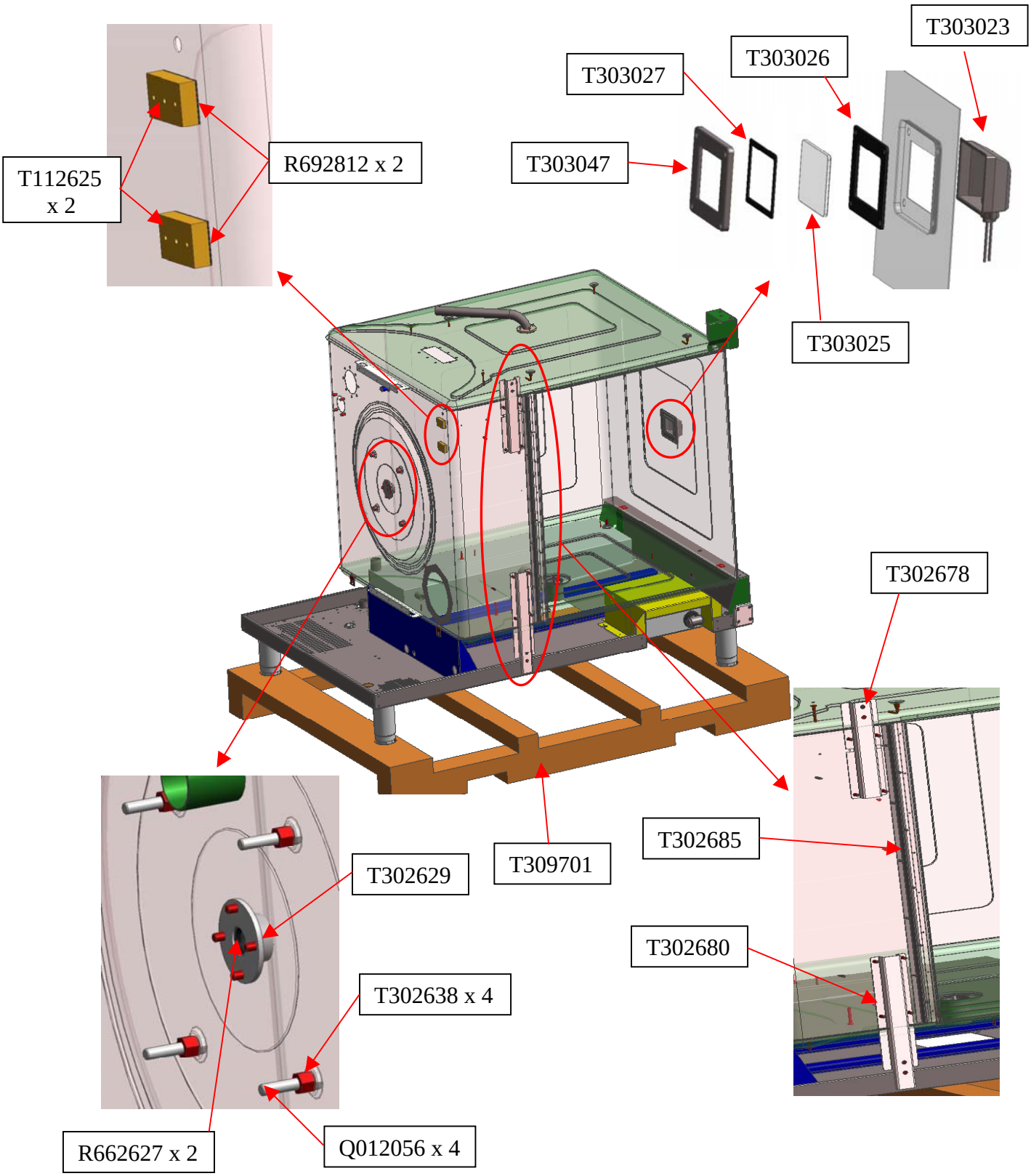
T303023
T303026
T303027
T303047
T112625
x 2
R692812 x 2
T303025
T302678
T302685
T309701
T302629
T302680
T302638 x 4
R662627 x 2
Q012056 x 4

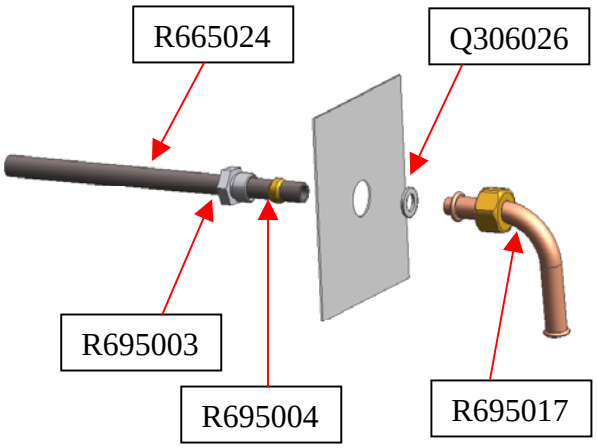

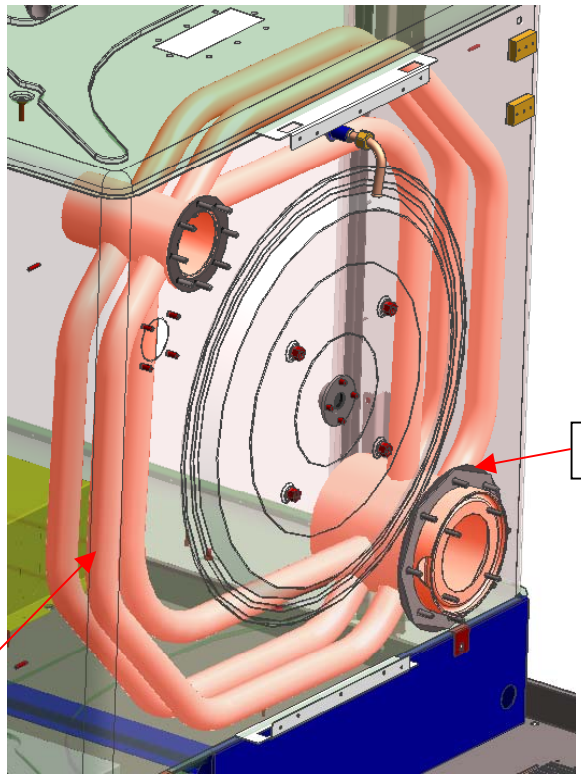

T305700 Heat exchanger. It will be drillet on the botton

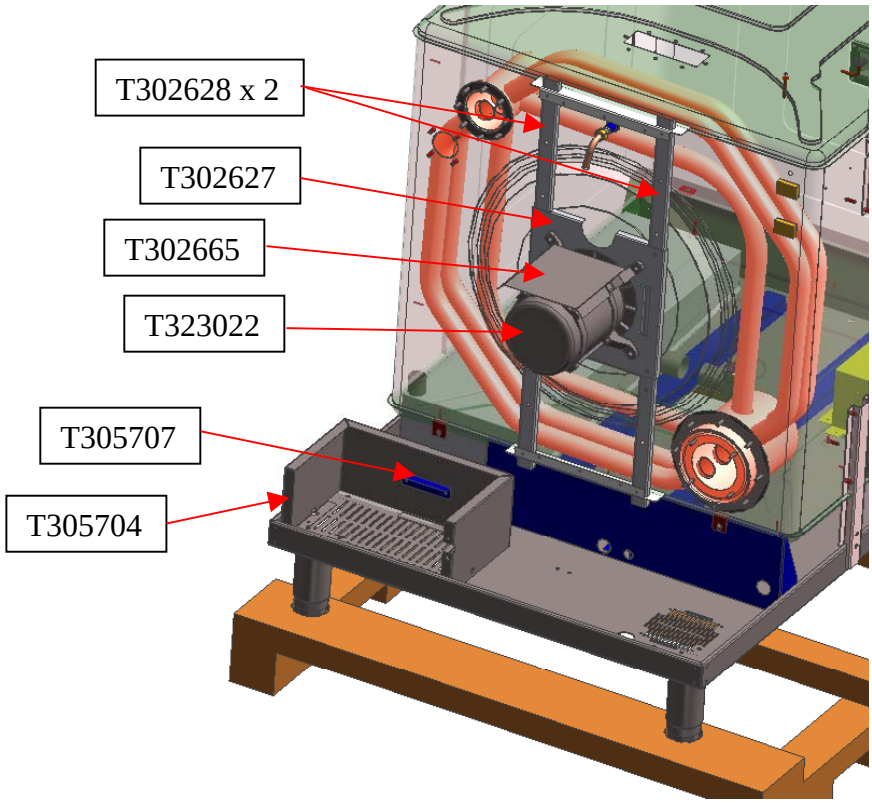

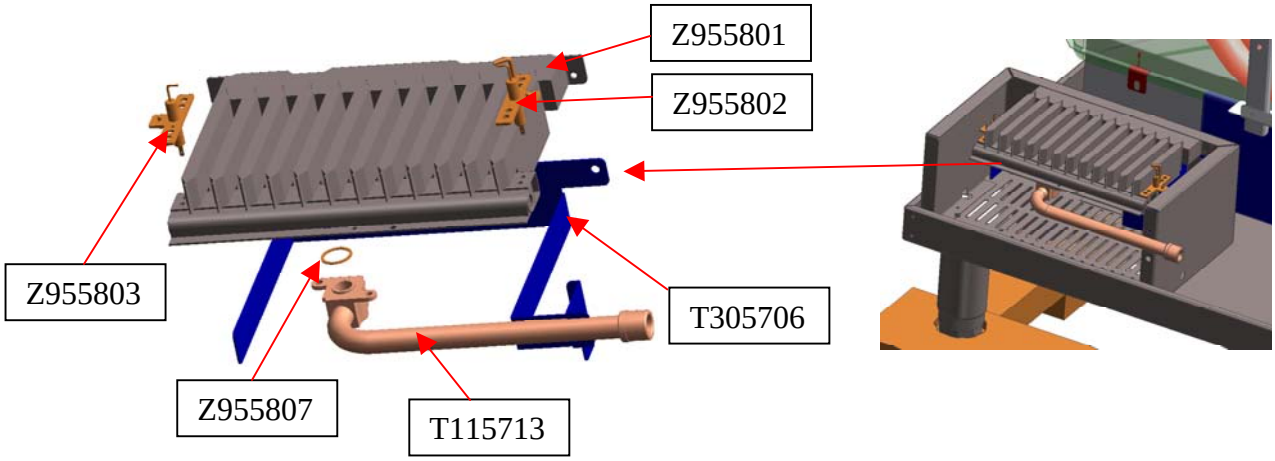
Z955801
Z955802
Z955803
T305706
Z955807
T115713

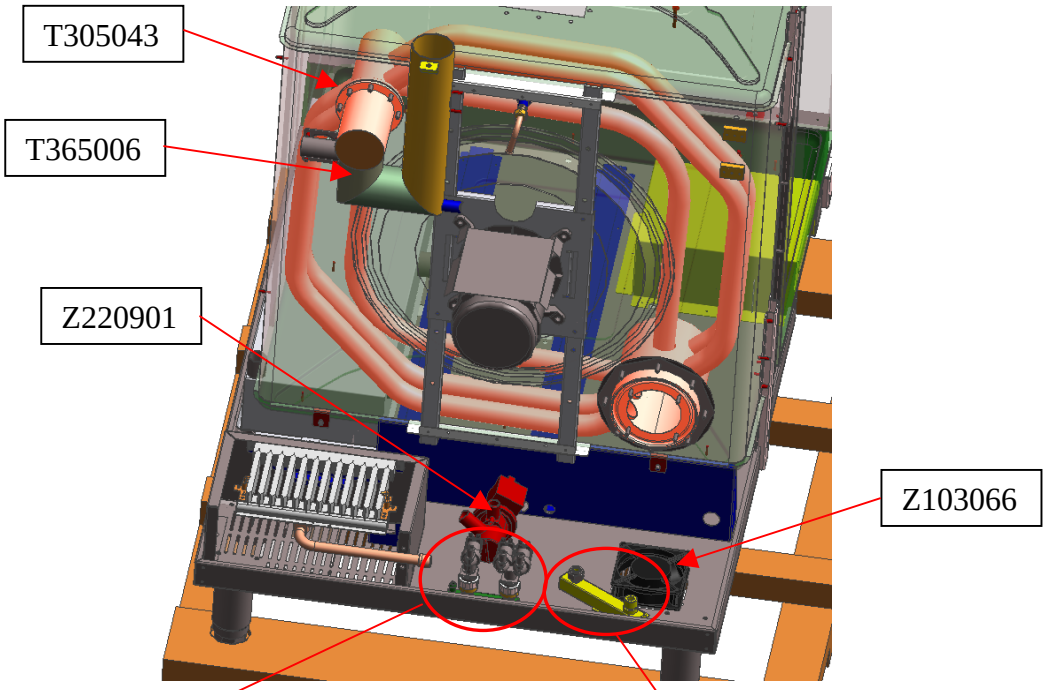
T305043
T365006
Z220901
Z103066

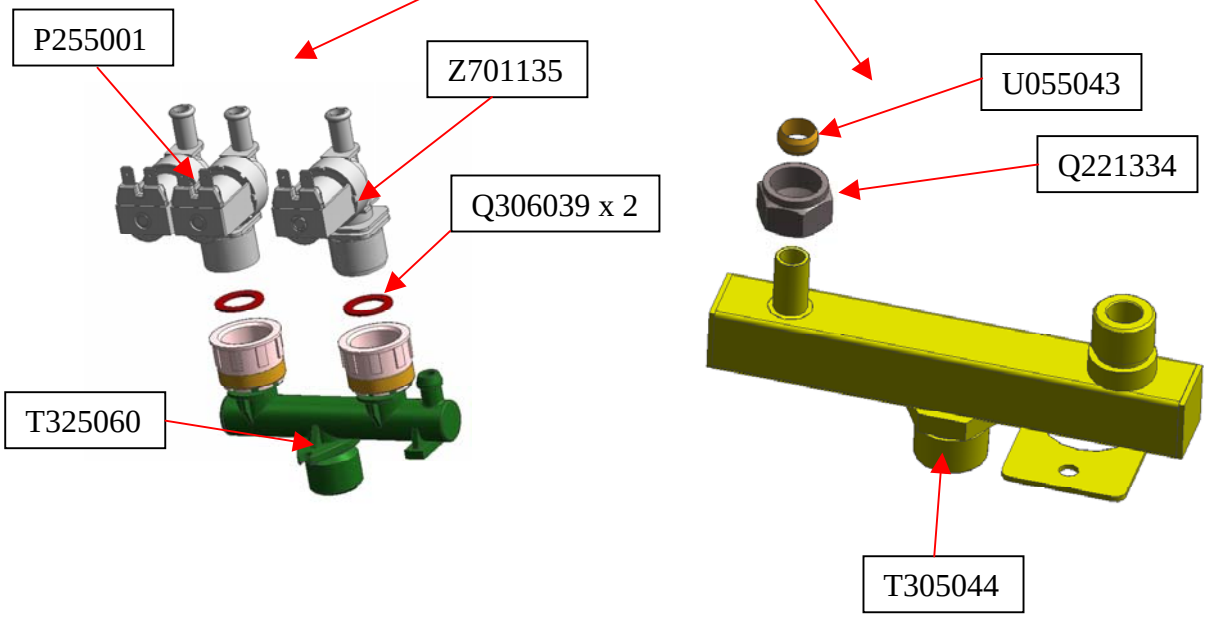
P255001
Z701135
Q306039 x 2
T325060
U055043
Q221334
T305044

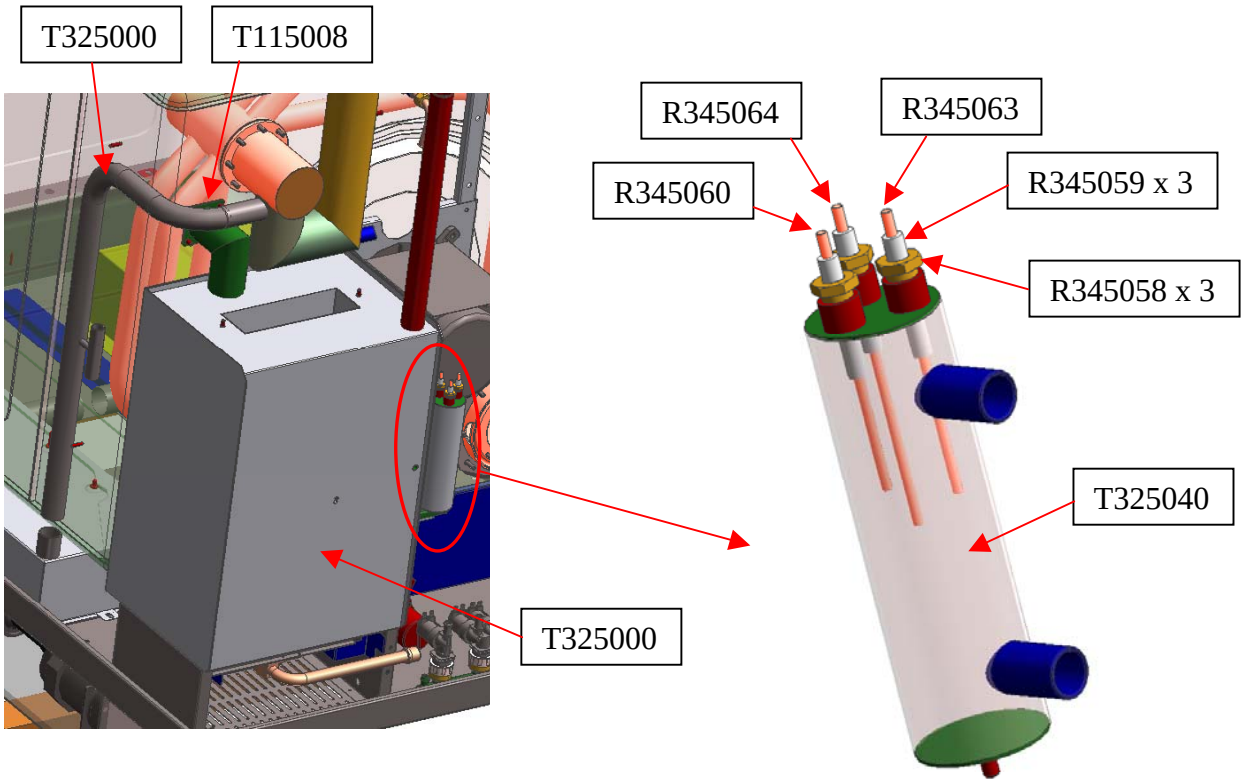

Convection oven

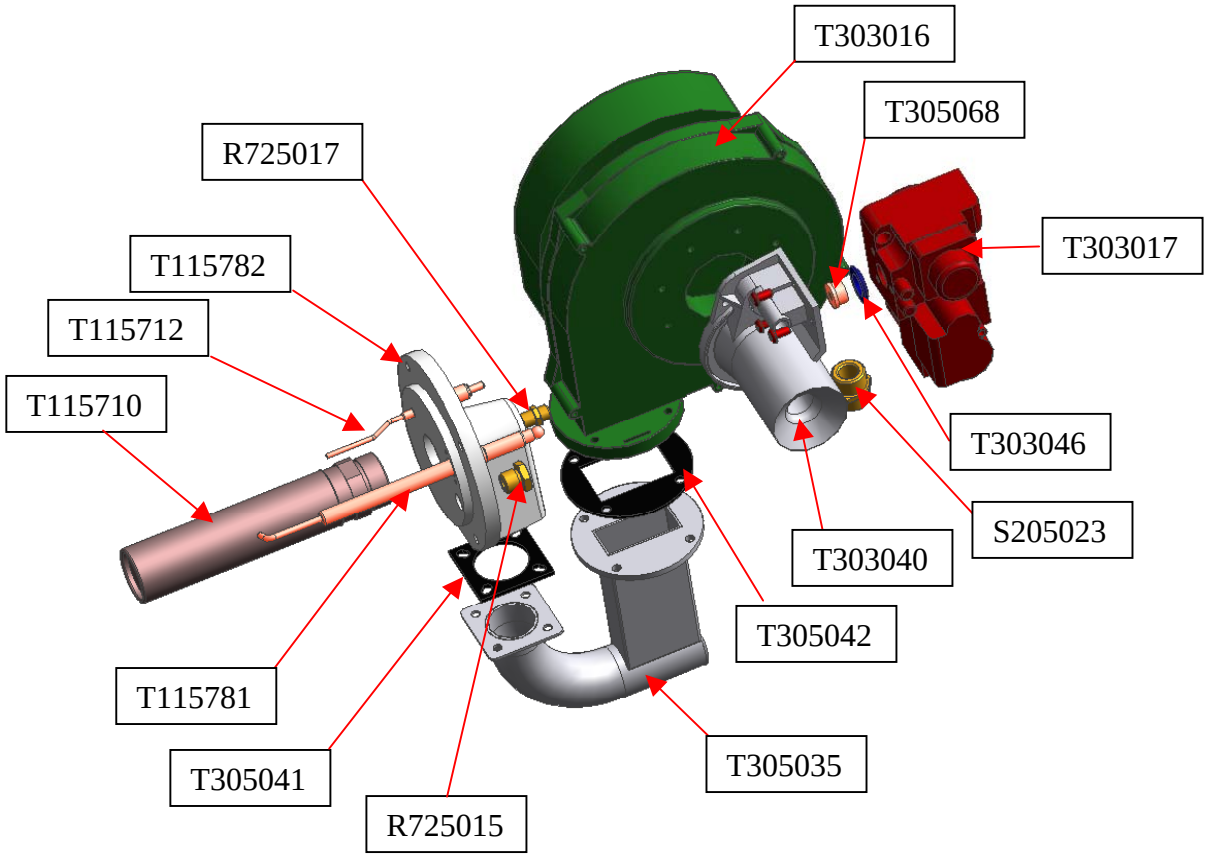

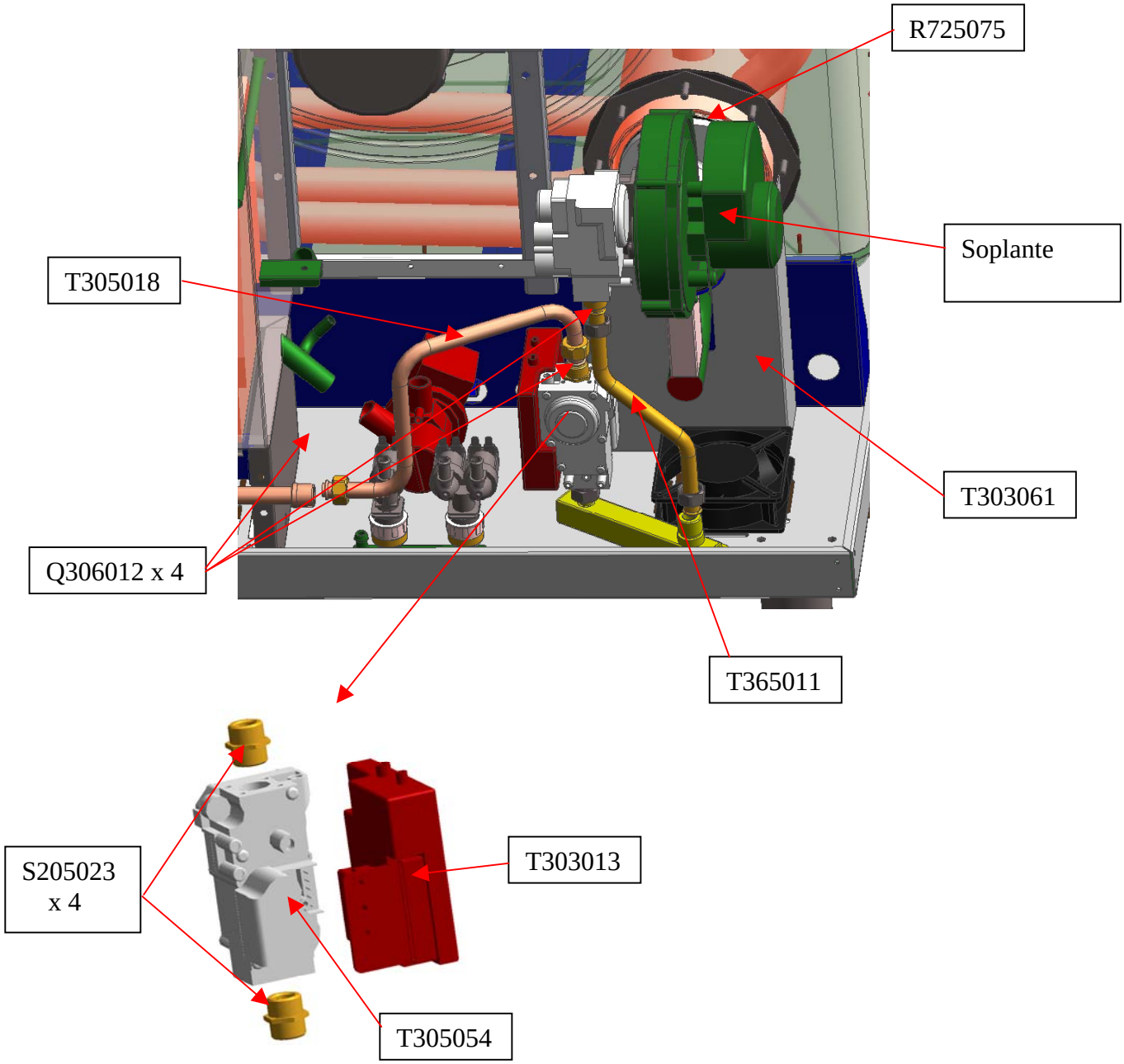
R725075
Soplante
T305018
T303061
Q306012 x 4
T365011
S205023
x 4
T303013
T305054

HGP 10/21 Control panel

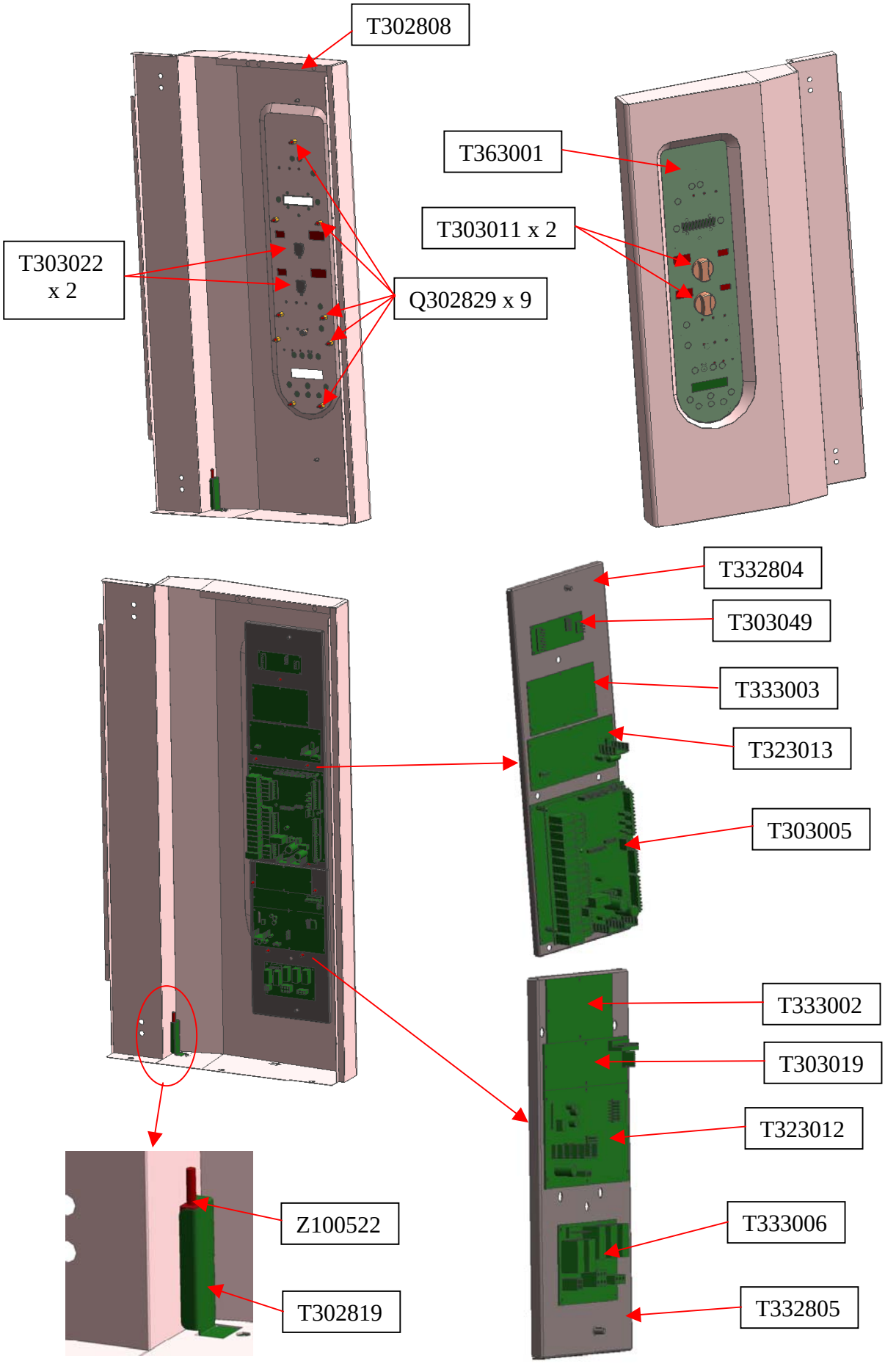

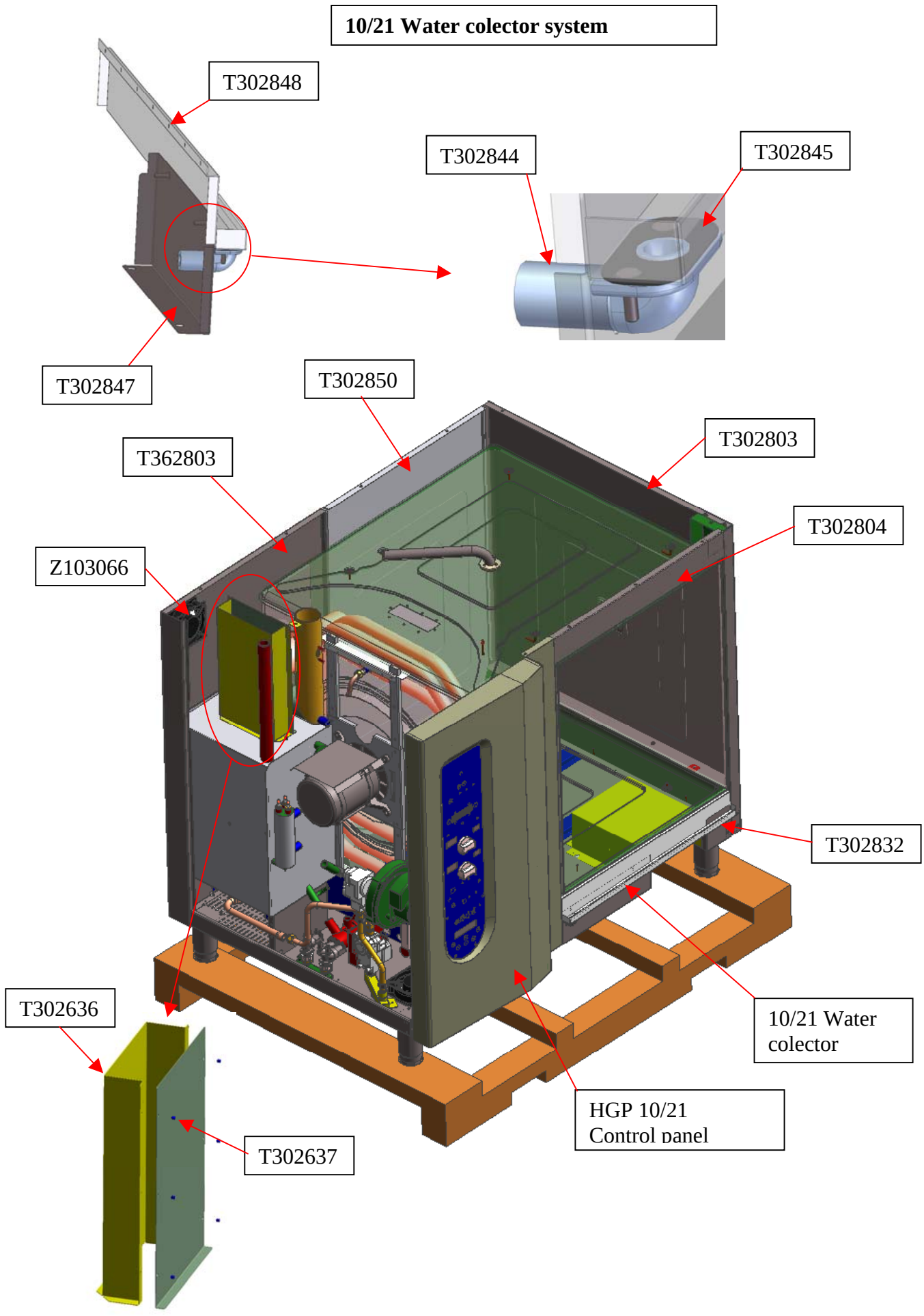
10/21 Water colector system
T302848
T302844
T302845
T302847
T302850
T362803
T302803
T302804
Z103066
T302832
T302636
T302637
10/21 Water colector
HGP 10/21 Control panel

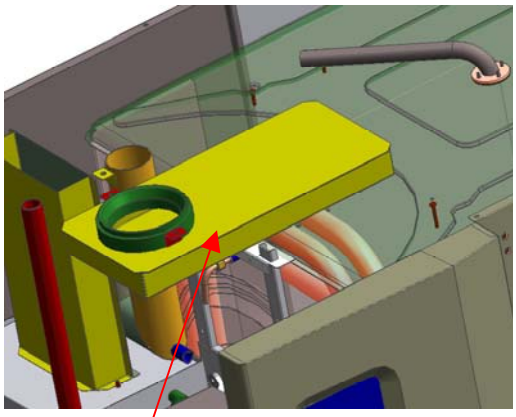

T302630

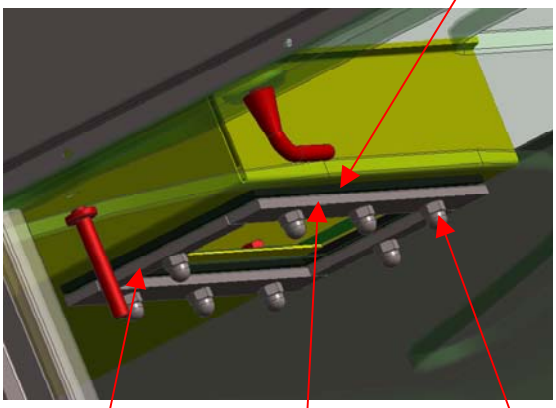

T122630

T302655 x 2

T122631 x 2

Q213131 x 8

10/21 HGP Electric house

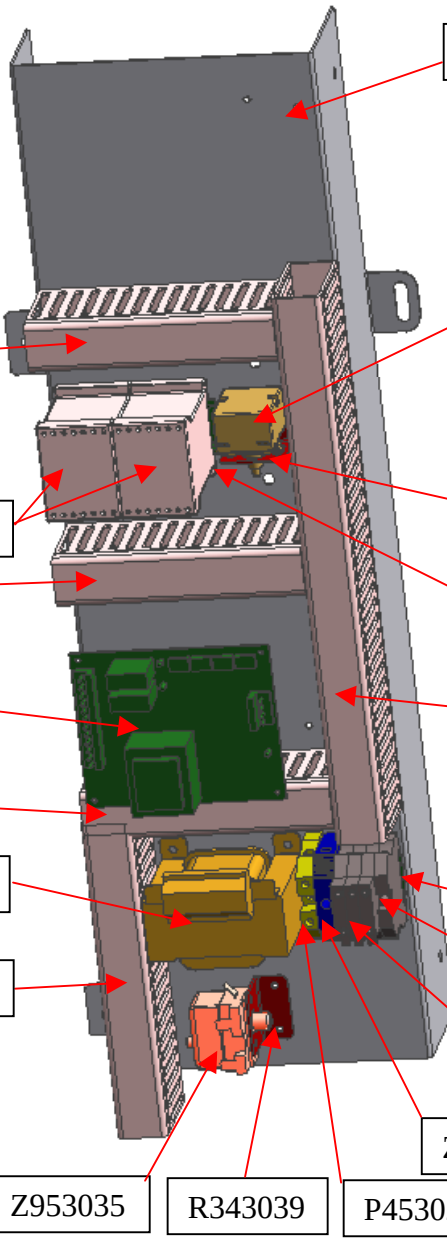

T303064

T303009

R343039

Z403016

3715520–150 x 4

Z743009 x 2

T303048

3715520-350

R503005

3715520-200

Z123018

Z263303

R073005 x 2

Z263302

Z953035

R343039

P453026

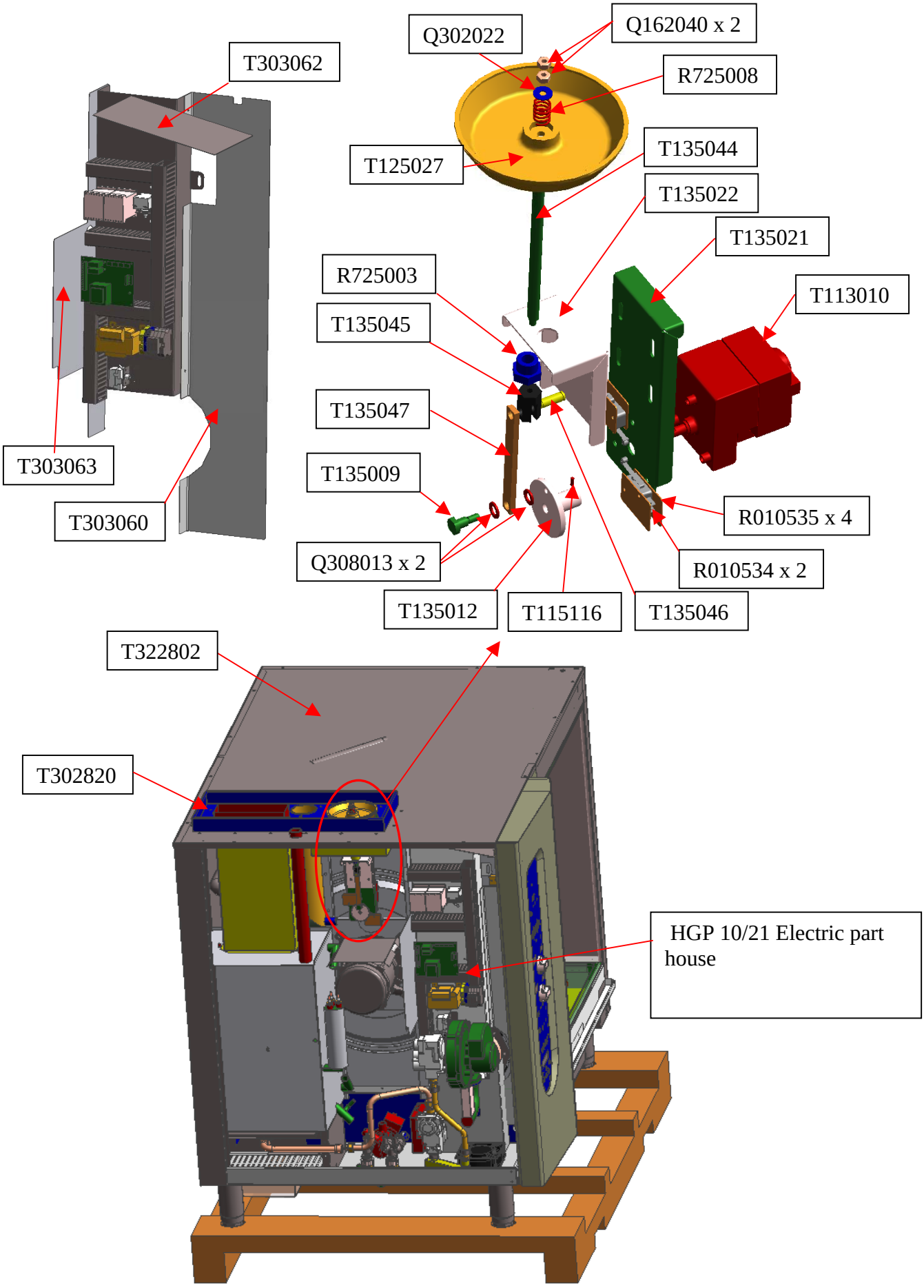
Q162040 x 2
Q302022
T303062
R725008
T135044
T125027
T135022
T135021
R725003
T113010
T135045
T135047
T303063
T135009
T303060
R010535 x 4
Q308013 x 2
R010534 x 2
T135012
T115116
T135046
T322802
T302820
HGP 10/21 Electric part house

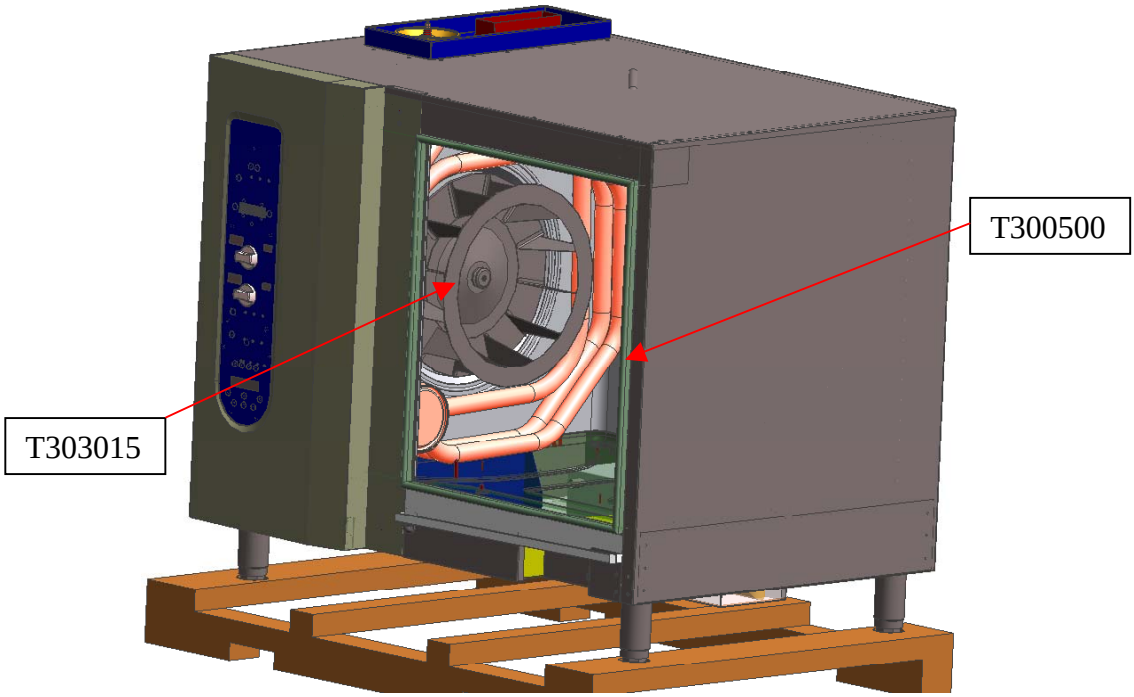

10/21 GAS - Cubreventilador

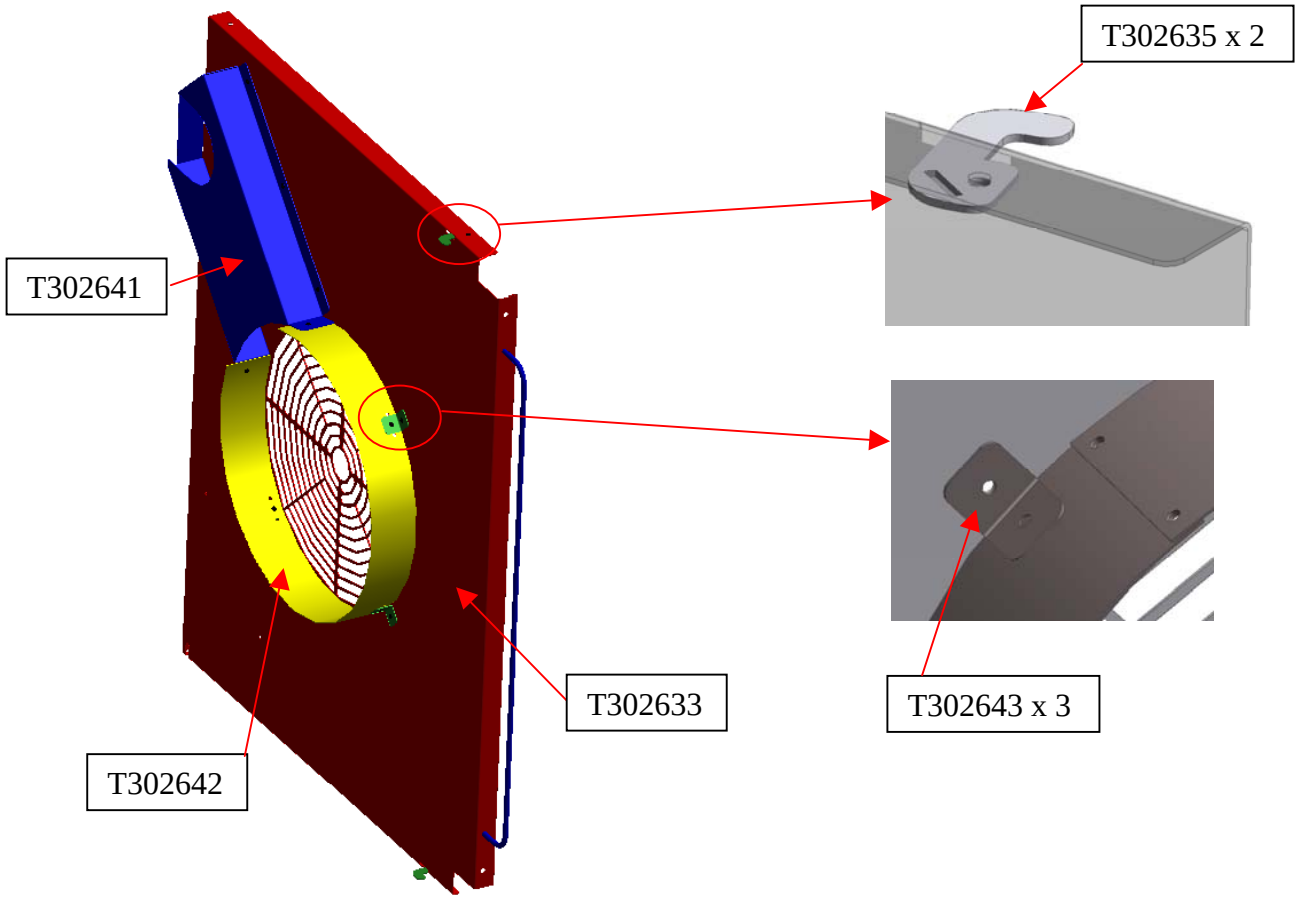

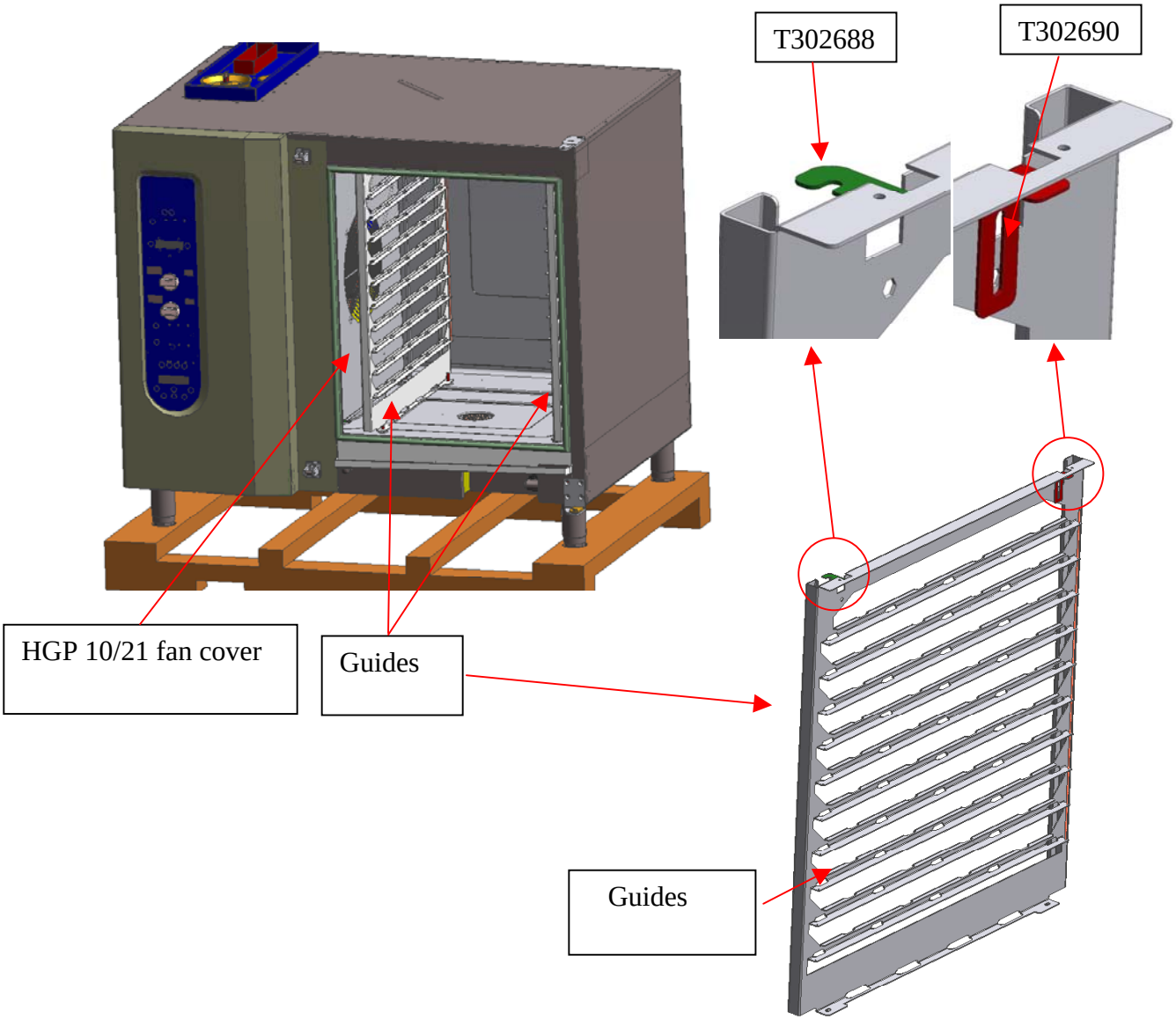
T302688
T302690
HGP 10/21 fan cover
Guides
Guides

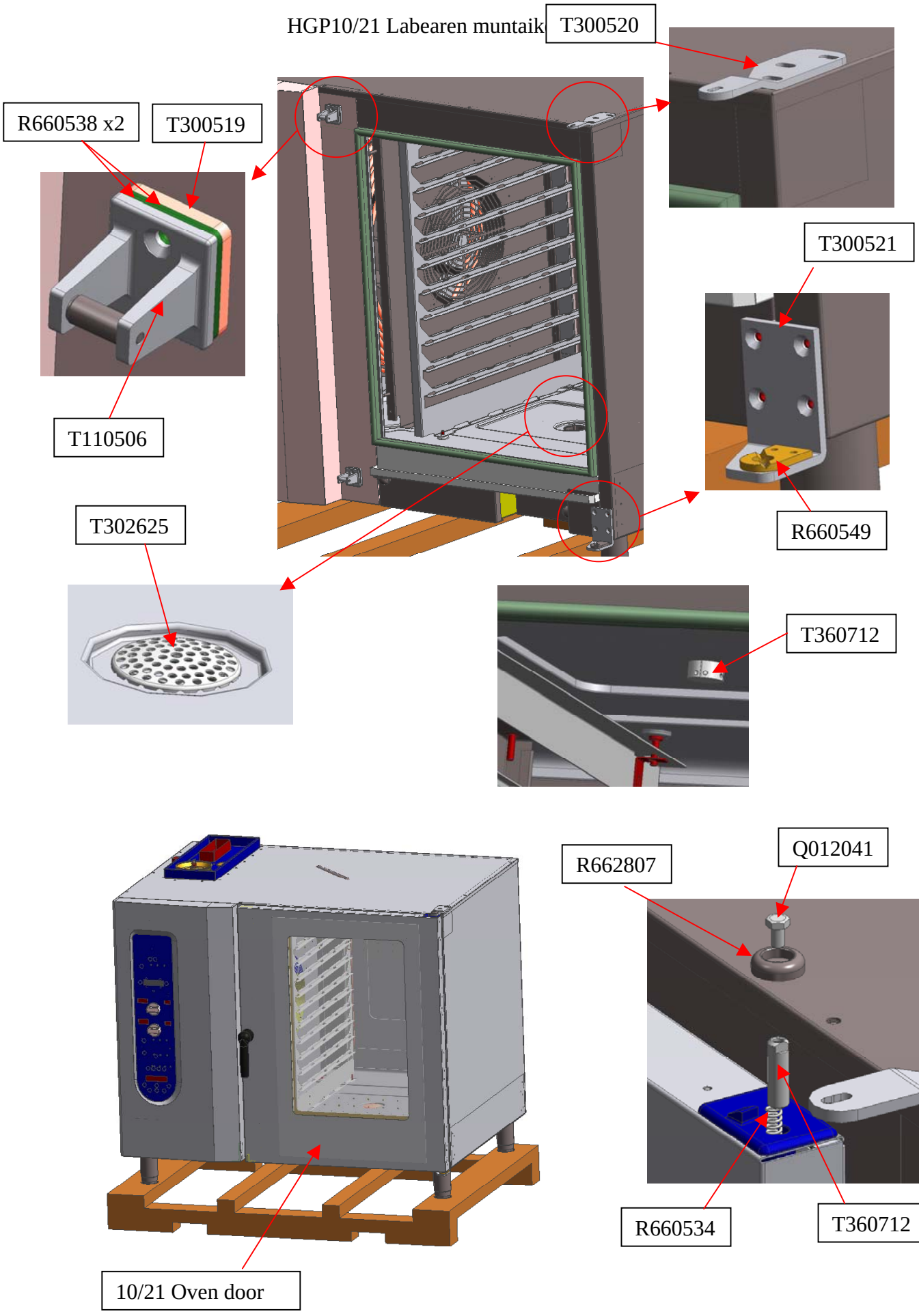
T300520
R660538 x2
T300519
T300521
T110506
R660549
T302625
T360712
R662807
Q012041
R660534
T360712
10/21 Oven door