MANUAL DE USO Y DESPIECE TECNICO

Electric Steam Boiler with iron
Generador eléctrico producción vapor

Modelo:

SIMBA MINI

Julio 2012 July

Fagor Industrial

CONTENTS

1 INTRODUCTION
2 GENERAL DESCRIPTION
3 MACHINE IDENTIFICATION
4 TECHNICAL FEATURES
5 MACHINE COMPONENTS
6 MACHINE UNPACKING AND INSTALLATION
7 INSTRUCTIONS FOR USE
8 TROUBLESHOOTING AND SOLVING
9 PRECAUTIONS
10 HAZARDOUS USE
11 DIMENSIONS AND TECHNICAL DRAWINGS
12 MAINTENANCE PROCEDURES
13 DISPOSAL
14 HOW TO ORDER SPARE PARTS
15 HANDLING AND TRANSPORT
16 WARRANTY
17 CONFORMITY DECLARATION

1 INTRODUCTION

The present user's and maintenance manual refers to the electric steam generator "SIMBA mini".
The present user's and maintenance manual contains important information for the operator's health safeguard and safety.

This manual has to be read and kept in a safe place, in order to be always at the operator's disposal in case of need.
FAGOR INDUSTRIAL S.COOP cannot be held liable for any damage to things or injury to persons caused by improper use of the machine in contrast with these instructions.

Any possible modifications effected on the components of the machine or its different use without prior written authorization by FAGOR INDUSTRIAL S.COOP relieve the latter of injury to persons and / or damages to things,warranty voiding any bindings, as well.

2 GENERAL DESCRIPTION

The SIMBA MINI boiler produces steam, and must be connected to external electric and water supplies to operate. Its use is simple and efficient thanks to its front control panel.

3 MACHINE IDENTIFICATION

On the left side of the boiler, a metal rating plate quotes the model, serial number, the year of construction and electrical and pressure supply.

4 TECHNICAL FEATURES

TECHNICAL FEATURES	
Electrical power supply	230V – 1Ph – 50/60 Hz
Boiler capacity	5 L
Maximum steam pressure	2,8 bar
Boiler power supply	1450 W
Iron power supply	800 W
Sound pressure level	< 70 dB(A)
Operating temperature	+ 5 ÷ + 80 °C
Operating humidity	90 % max.
Storing temperature	-20 ÷ +50 °C
Net dimensions	270 x 380 x 110 mm.
Net weight	11 Kg
Gross dimensions (with packing)	400 x 300 x 400 mm.
Gross weight (with packing)	12 Kg
Net weight with trolley	18 Kg
Overall dimensions with trolley (with packing)	460 x 310 x 930 mm.
Gross weight with trolley (with packing)	20 Kg

WARNING: *Check that the supplied voltage and pressure correspond to that indicated in the table above.*

5 MACHINE COMPONENTS

The main parts of the machine are as follows:

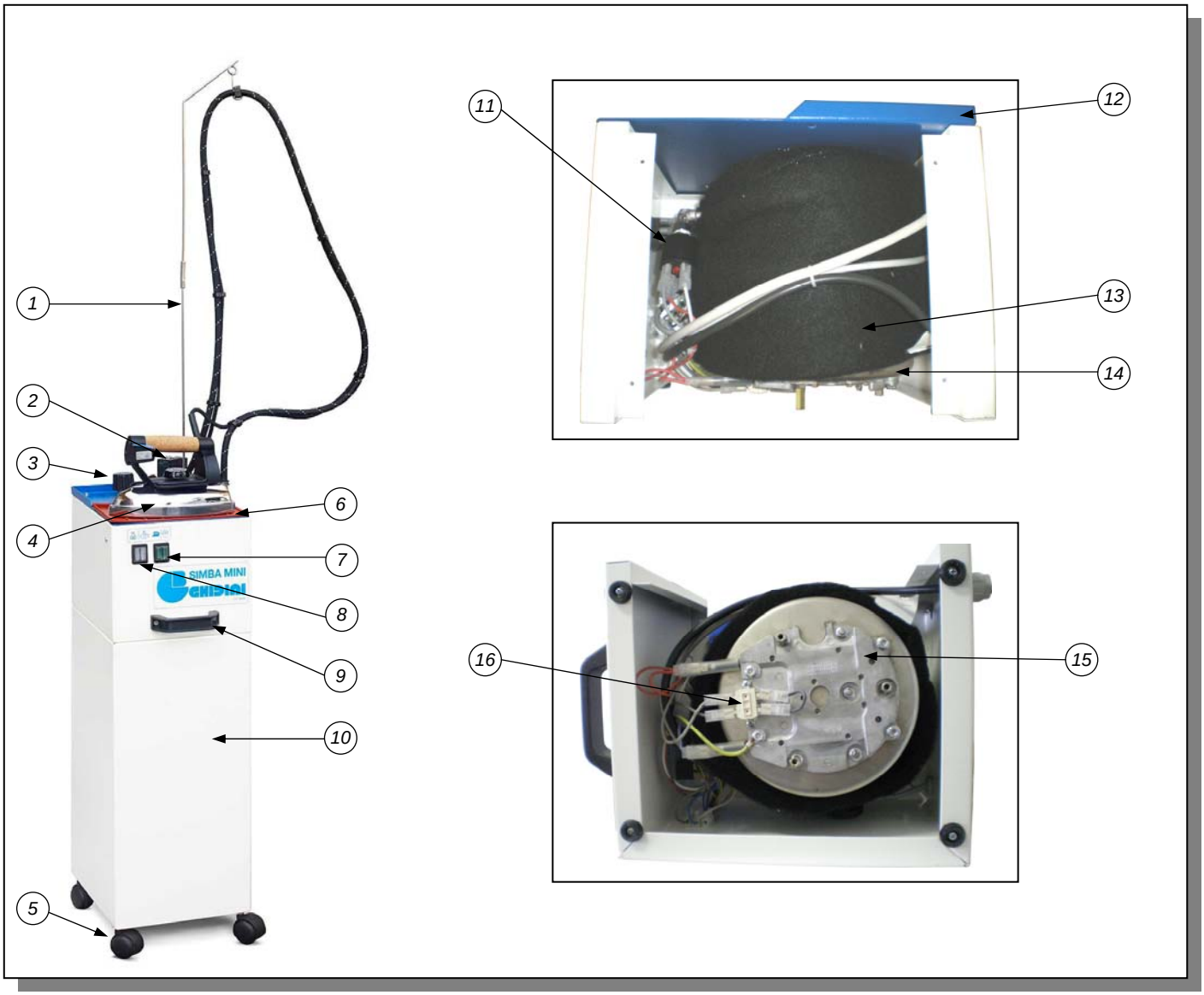

Pos.	CODE	DESCRIPTION	Pos.	CODE	DESCRIPTION
1	364253	Iron hose support (antenna)	9	523260	Handle
2	39B045	Steam valve 230V 50Hz	10	Z27A07	Complete trolley (optional)
3	22K050	Refill and safety cap	11	45G012	Pressure switch
4	Z18D00	Iron model K	12	162126	Iron rest tray
5	56B010	Swivelling wheels	13	46M028	Boiler casing
6	25A001	Silicone iron rest	14	201007	Boiler
7	43A014	Boiler and iron switch	15	43A061	Boiler thermostat
8	43A016	Double Indicator	16	43B018	Safety thermostat

Iron model K cod. Z18D00

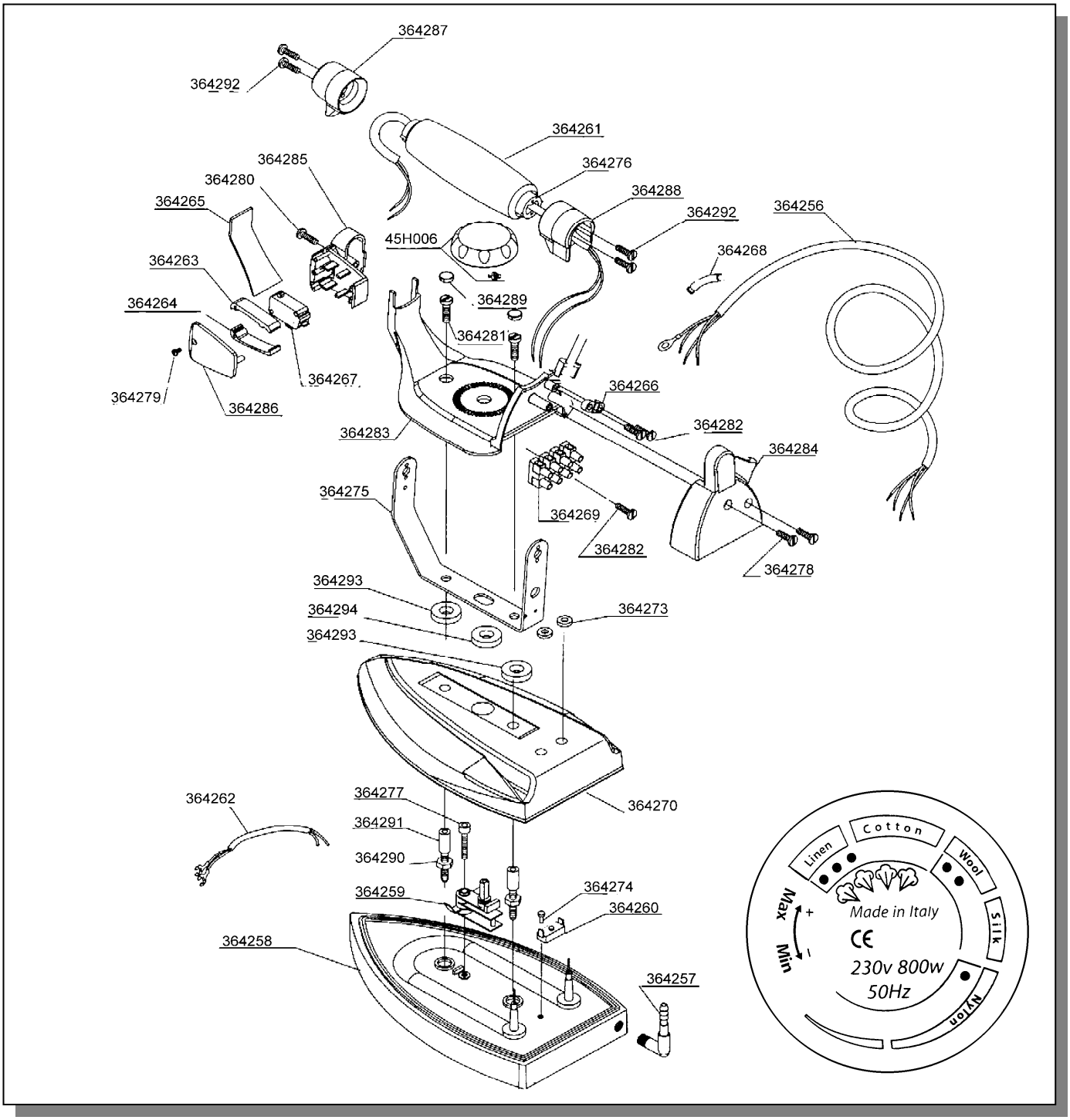

COD.	DESCRIPTION	COD.	DESCRIPTION	COD.	DESCRIPTION
364273	Cable lead for board heater	364278	Screw for back cover	364287	Front handle holder for iron
364256	Electrical cable for iron	364279	Screw for iron microswitch cover	364288	Rear handle holder for iron
364274	Screw for thermostat	364280	Screw for microswitch holder 3.5 x 19 AU	364289	Screw covers for iron
364257	Nickel-plated brass hose holder	364281	Screw for handle fixing M5 x 10 ZNB	364290	Brass washer
364258	Complete iron plate	364282	Screw for terminal board fixing	364291	Brass spacers
364259	Adjustable thermostat	364283	Handle cover for iron	364267	Complete microswitch for iron
364260	Thermostat with manual reset	364284	Rear cover for iron	364292	Screw for iron handle
364261	Cork grip	364285	Button holder for iron	45H006	Knob made of black bakelite
364275	Handle support for iron	364286	Button holder cover for iron	364293	Washer for screw
364270	Casing for iron	364263	Upper button for iron	364294	Washer for knob
364262	Cables for iron	364264	Lower button for iron	364268	Cable lead for electrical cable
364276	Insert for iron handle	364265	Plate for handle support	364269	Terminal board with 4 poles
364277	Screw M4 x 22 for thermostat fixing	364266	Cable holder for iron		

6 MACHINE UNPACKING AND INSTALLATION

WARNING: The unit must be installed, opened and repaired by fully qualified technicians only.

6.1 UNPACKING

Find the most suitable place where to put the machine, then remove it from the packaging and check that it is intact. The packing materials do not require special disposal as they are not dangerous or polluting. Refer to the local rules in force to discard them.

6.2 INSTALLATION

The machine does not need to be anchored to the floor, except for installation on self-moving vehicles, where it is necessary to use the holes on the base for the right attachment.
For correct use and operation, as well as for easy maintenance, leave a free space around the machine.
Do not put the machine in dangerous or flammable places.

6.3 ELECTRICAL CONNECTION

Connect the machine to the power line as shown in the diagram, ensuring that the power supply voltage corresponds to that indicated on the rating plate. To ensure safe connection to the main supply, use a magnetothermal switch or otherwise a switch with fuses.

WARNING: At the end of the electrical connection, check that the cables are well fixed, isolated and protected from bumps.

7 INSTRUCTIONS FOR USE

7.1 OPERATION

- Installation and maintenance must be carried out by qualified technicians only.
- Do not use the machine plunged in fluids, or in dangerous or flammable places.
- Do not ignore the dangers to the operator's health and follow the hygienic and safety prescriptions.
- Always use piping suitable for operating pressures.
- Make sure that the electrical wiring is carried out correctly according to the current regulations, and that the fuse blocks are closed and complete of fuses.
- Check that the safety and control devices of the boiler (pressure gauge, pressure switch and safety valve) are intact.
- Check that the electrical wiring and the piping of the iron are intact and secure.

7.2 USE

- Verify the water level in the tank and add more water if necessary.
- Turn on the boiler and the iron.
- The boiler power supply is fed automatically by turning on the indicator light.
- The boiler reaches the operating pressure of 2.8 bar after a few minutes and the related light turns on automatically.
- The boiler is ready to supply steam.
- Absence of water in the boiler is indicated by the switching off of the two lights (boiler power supply and steam pressure).
- To top up the water it's necessary to wait 2 or 3 minutes after the lights turn off.
- It's possible to iron without completely filling the water tank. Using 1 litre of water provides a range of ironing time of 1 to 2 hours. To verify the amount of water added, simply insert the dipstick level into the boiler and cover the upper hole with your finger as you extract it.

8 TROUBLESHOOTING AND SOLVING

The following table shows the main problems and the corresponding causes and solutions. In case of doubts or unresolved problems, do not look for the trouble by removing pieces of the machine, but rather contact the Technical Office or seller of Ghidini products.

PROBLEMS AND SOLUTIONS		
TROUBLES	POSSIBLE CAUSES	SOLUTIONS
The machine does not work.	Main power failure	*Check that the supply terminals are live.*
	Fuses are blown	*Check fuses.*
The boiler switch is on but the power supply and steam lamps are turned off.	Absence of water in the boiler	*Refill water tank.*
	Faulty safety thermostat.	*Replace thermostats.*
The boiler light and switch are on, but the boiler does not reach the requested operating pressure.	Heaters are burnt out	*Check heaters.*

WARNING: *If the safety valve is released, switch the boiler off immediately and contact a qualified technician. Do not block the exhaust and do not underestimate the severity of the problem, as there could be risk of explosion.*

9 PRECAUTIONS

Read carefully the instructions and the risks related to the use of a steam boiler. Operators must know operating system and clearly understand its dangers through the manual.

Main electrical supply
Prior to carrying out any inspection or work on the machine, disconnect it from the main electrical supply and make sure that nobody can connect it again during the technical operations. All the electrical or electronic machines or basic structures installed must be connected to the ground line.
Flammability
Adopt all the necessary precautions to avoid any direct contact with hot materials or flames. Put fire extinguishers near the machine for an immediate intervention in the event of fire.
Pressure / Steam
Before each intervention switch off the boiler and check that residual pressures are not inside any branch of the hydraulic circuit. They could cause steam sprays in the case of disassembling of pipes or components.

Noise
The noise emission is not excessive, because it remains under 70dB(A).

10 HAZARDOUS USE

The verification of conformity to the essential safety rules and to the dispositions enclosed in the machine directive is carried out by filling in the checking lists arranged in advance and included in the technical file.
The checking lists are of two kinds:

- List of dangers (extract from EN 1050 referring to EN 292.
- Application of the essential safety characteristics (Dir. Machine – encl. 1, part 1)

The dangers described in the following items have not been completely eliminated, but they have been considered acceptable:

- During the maintenance operation there could be some sprays of steam, at low pressure, or of spotting product (maintenance operation must be carried out using suitable protection devices).
- During use it is possible to accidentally come into contact with surfaces at a temperature of over 80°C. Be careful.
- Protection against direct and indirect contacts must be adopted by the user.

11 DIMENSIONS AND TECHNICAL DRAWINGS

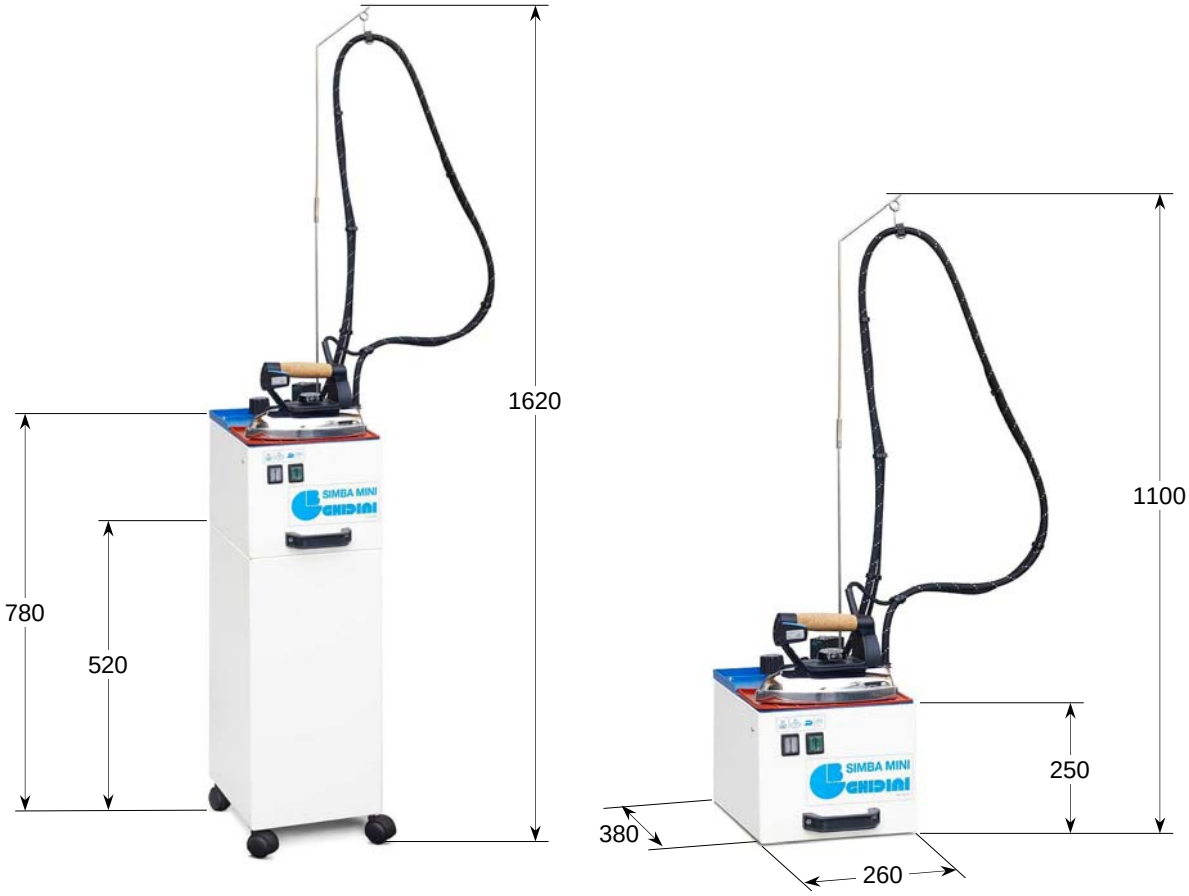

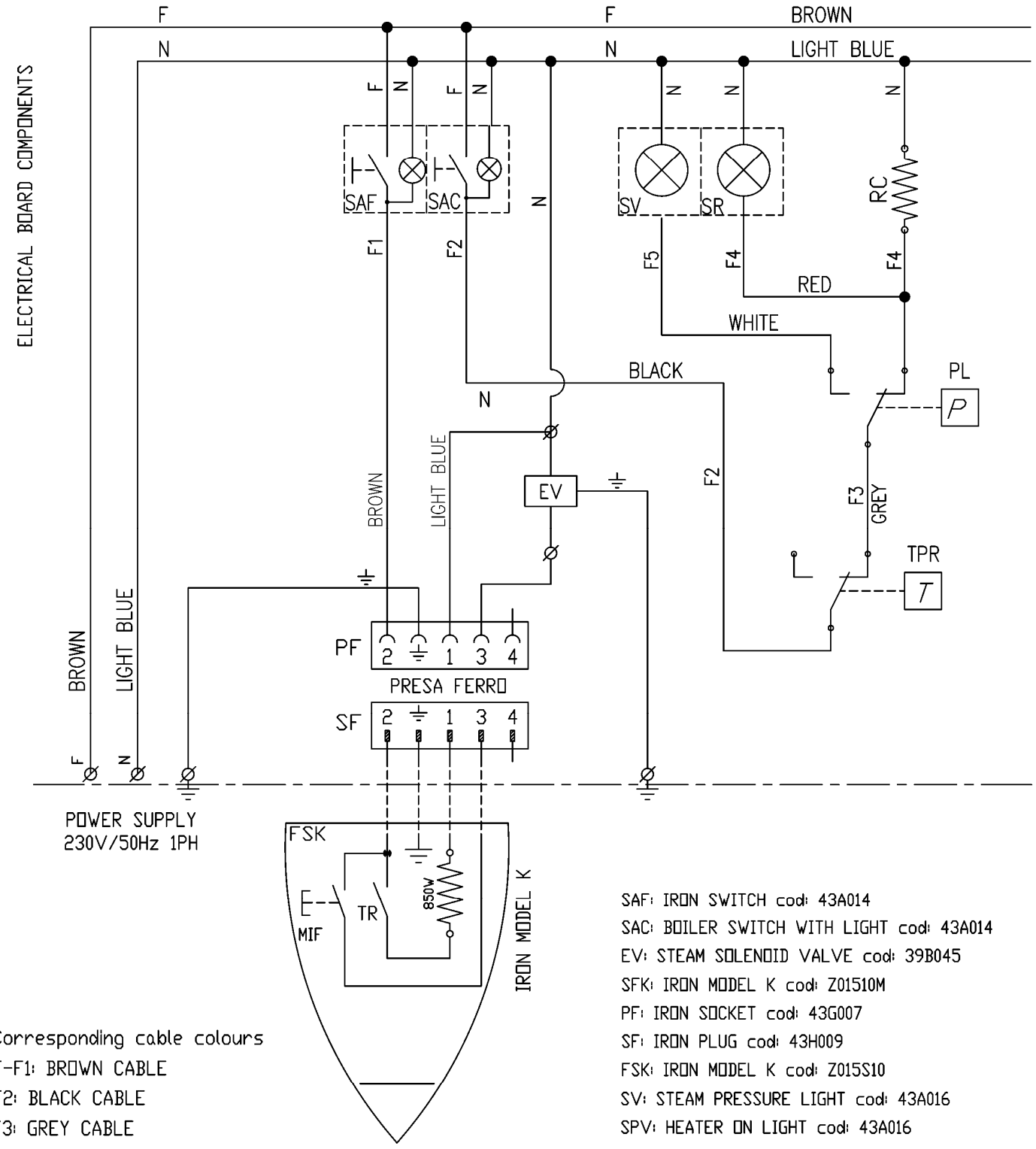

Corresponding cable colours
F-F1: BROWN CABLE
F2: BLACK CABLE
F3: GREY CABLE
F4: RED CABLE
F5: WHITE CABLE
N: LIGHT BLUE CABLE

SAF: IRON SWITCH cod: 43A014
SAC: BOILER SWITCH WITH LIGHT cod: 43A014
EV: STEAM SOLENOID VALVE cod: 39B045
SFK: IRON MODEL K cod: Z01510M
PF: IRON SOCKET cod: 43G007
SF: IRON PLUG cod: 43H009
FSK: IRON MODEL K cod: Z015S10
SV: STEAM PRESSURE LIGHT cod: 43A016
SPV: HEATER ON LIGHT cod: 43A016
RC: BOILER HEATER cod. 212035
TPR: SAFETY THERMOSTAT cod: 45B018
PL: STEAM PRESSURE LIGHT cod: 45G012

Denominazione *Description*	SIMBA MINI POWER SUPPLY 230V/50Hz 1PH			Titolo *Descriz.*	SCHEMA ELETTRICO *ELECTRICAL WIRING*
3				Data	25/05/11
2				Dis.	T & P
1				Cod.	S.E. Simbamini
Modifiche *Changes*		Data *Date*	Firma *Sign.*	Appr.	

GHIDINI
S. Giuliano Milanese

Dis. NG *Dwg.*

Foglio 1/1 | Segue

QUESTO DISEGNO VIENE CONSEGNATO ALL'ESPRESSA CONDIZIONE CHE NON VENGA SENZA NS/ CONSENSO NE RIPRODOTTO NE CEDUTO AD ALTRE DITTE

12 MAINTENANCE PROCEDURES

In case of troubles, contact the technician for the inspection and, if necessary, for unscheduled maintenance.

Periodically it is necessary to carry out the following procedures:

OPERATIONS	HOURS OF WORK
Empty the boiler	150

This machine does not require special equipment for check and maintenance operations, but use suitable tools and personal protection in compliance with D.Lgs. 626/94 and in good condition (DPR. 547/55) in order to avoid harm to people and to parts of the machine.

Prior to carrying out any inspection or work on the machine, make sure that it is disconnected from the main electrical supply.

13 DISPOSAL

During the maintenance operations, or in case of demolition, do not litter the environment with polluting elements. Refer to the local laws in force for appropriate disposal. In case of demolition, it is necessary to destroy the identification rating plate and any other document.

14 HOW TO ORDER SPARE PARTS

For the spare parts request it is necessary to quote the model of the machine, the serial number, the quantity of the spare parts requested and their code number. (This data is available on the rating plate, the technical data and on the operating instructions.)

If the voltage and frequency of the electrical parts to replace are not V220-380/50Hz (check these particular characteristics on the rating plate of the part to replace), quote the right data.
The technical data, the descriptions and pictures included in this manual are not binding. The manufacturer reserves the right to make any necessary modification without notice and without updating these operating instructions.

15 HANDLING AND TRANSPORT

Before its transport the machine is carefully packed in a wooden cage. During the transport and the stocking operations, pay attention to warnings printed on the packaging. At the moment of the delivery, check that the packing is intact and put the machine in a dry place.

16 WARRANTY

All Ghidini products are supplied with a guarantee for materials and manufacturing failures for a period of maximum 12 months from the date of the delivery.

The guarantee is extended as follows:
In case of malfunction of the machinery contact Ghidini and quote the trouble, the model, serial number and the operating conditions of the machine. Upon receipt of the machine and after an accurate analysis, Ghidini
reserves the right to repair or to replace the product. If the machine is still under guarantee, Ghidini. will repair or replace it free of charge, but if the returned product is not defective, Ghidini reserves the right to charge the freight to the customer (transport, etc.).

This warranty must be considered annulled in case of damages caused by incorrect use, negligence, wear and tear, chemical corrosion, or installation contrary to the operating instructions supplied by Ghidini. Any eventual modification or different use of the machine must be previously authorized by Ghidini through a written document, otherwise Ghidini may be considered free even from the guarantee bond.
The parts of the machine which are subjected to wear and tear are not included in the guarantee as well as all the items not explicitly cited, or damages and expenses caused by the defects of the product itself. Implicitly the customer accepts the conditions of the present warranty upon purchasing the machine. Eventual modifications to the guarantee must be authorized by Ghidini through a written document.