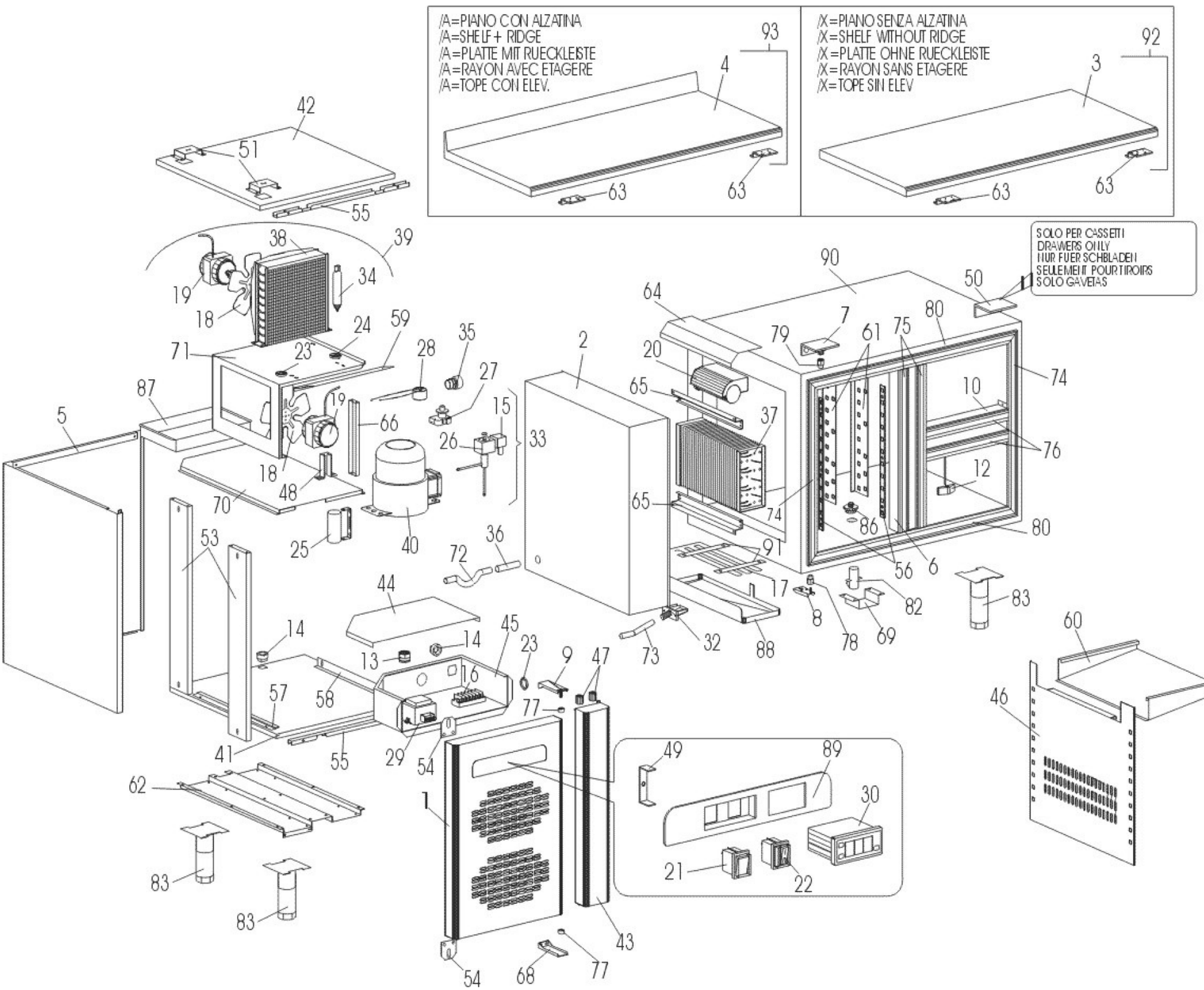
/A=PIANO CON ALZATINA
/A=SHELF + RIDGE
/A=PLATTE MIT RUECKLEISTE
/A=RAYON AVEC ETAGERE
/A=TOPE CON ELEV.
/X=PIANO SENZA ALZATINA
/X=SHELF WITHOUT RIDGE
/X=PLATTE OHNE RUECKLEISTE
/X=RAYON SANS ETAGERE
/X=TOPE SIN ELEV
SOLO PER CASSETTI
DRAWERS ONLY
NUR FUER SCHBLADEN
SEULEMENT POUR TIROIRS
SOLO GAVETAS

Modello Typ Model Modele Modelo

		TE1A TE1A/X TE1A/A	TE1A/2 TE1A/2X TE1A/2A	TE1A/11 TE1A/11X TE1A/11A	TE1A/3 TE1A/3X TE1A/3A	TE1B TE1B/X TE1B/A	TE1B/2 TE1B/2X TE1B/2A	TE1B/4 TE1B/4X TE1B/4A	TE1B/11 TE1B/11X TE1B/11A	TE1B/22 TE1B/22X TE1B/22A	TE1B/3 TE1B/3X TE1B/3A
Num. Cassetti Schublad Drawers Tiroirs Gabetas	1/2	---	2	---	---	---	2	4	---	---	---
	1/3	---	---	1	3	---	---	---	1	2	3
	2/3	---	---	1	---	---	---	---	1	2	---

		TE1C TE1C/X TE1C/A	TE1C/2 TE1C/2X TE1C/2A	TE1C/4 TE1C/4X TE1C/4A	TE1C/6 TE1C/6X TE1C/6A	TE1C/11 TE1C/11X TE1C/11A	TE1C/22 TE1C/22X TE1C/22A	TE1C/33 TE1C/33X TE1C/33A	TE1C/3 TE1C/3X TE1C/3A
Num. Cassetti Schublad Drawers Tiroirs Gabetas	1/2	---	2	4	6	---	---	---	---
	1/3	---	---	---	---	1	2	3	3
	2/3	---	---	---	---	1	2	3	---

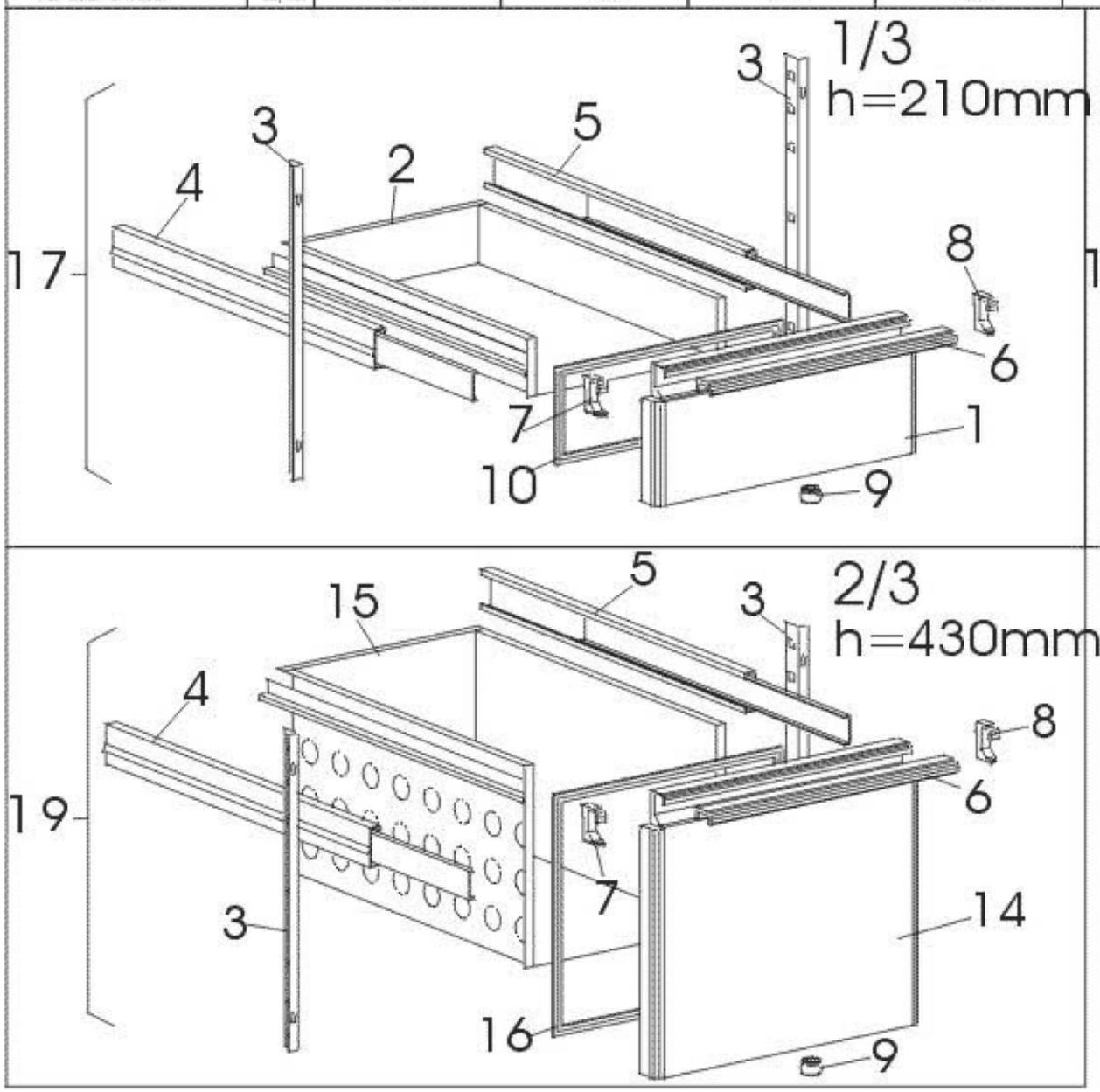

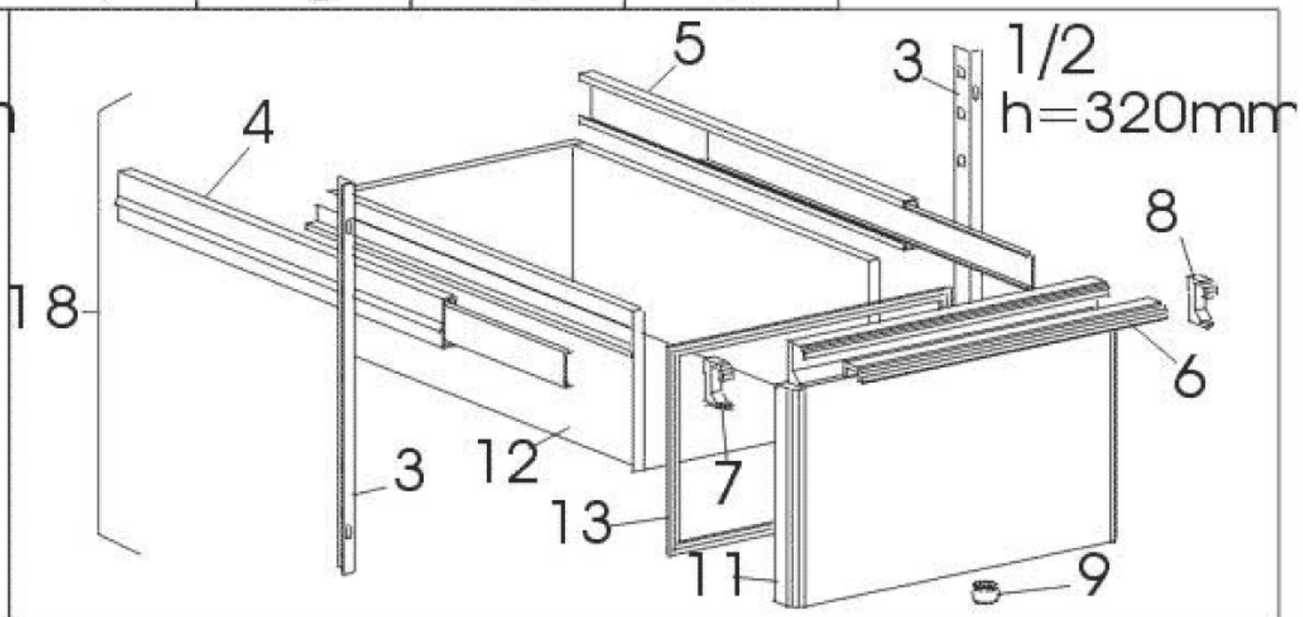

Modello Typ Model Modele Modelo

		TE1A TE1A/X TE1A/A	TE1A/2 TE1A/2X TE1A/2A	TE1A/11 TE1A/11X TE1A/11A	TE1A/3 TE1A/3X TE1A/3A	TE1B TE1B/X TE1B/A	TE1B/2 TE1B/2X TE1B/2A	TE1B/4 TE1B/4X TE1B/4A	TE1B/11 TE1B/11X TE1B/11A	TE1B/22 TE1B/22X TE1B/22A
Porte Ture Doors Portes Portas Gabetas	SX DX	1 1	1 ---	1 ---	1 ---	2 1	2 ---	1 ---	2 ---	1 ---
		TE1B/3 TE1B/3X TE1B/3A	TE1C TE1C/X TE1C/A	TE1C/2 TE1C/2X TE1C/2A	TE1C/4 TE1C/4X TE1C/4A	TE1C/6 TE1C/6X TE1C/6A	TE1C/11 TE1C/11X TE1C/11A	TE1C/22 TE1C/22X TE1C/22A	TE1C/33 TE1C/33X TE1C/33A	TE1C/3 TE1C/3X TE1C/3A
Porte Ture Doors Portes Portas Gabetas	SX DX	2 ---	3 1	3 ---	2 ---	1 ---	3 ---	2 ---	1 ---	3 ---

