Mod./Type:	_70/... FRE ...X _90/... FRE ...X	cod./num.	2532171.00
		data/date:	04/05/2015

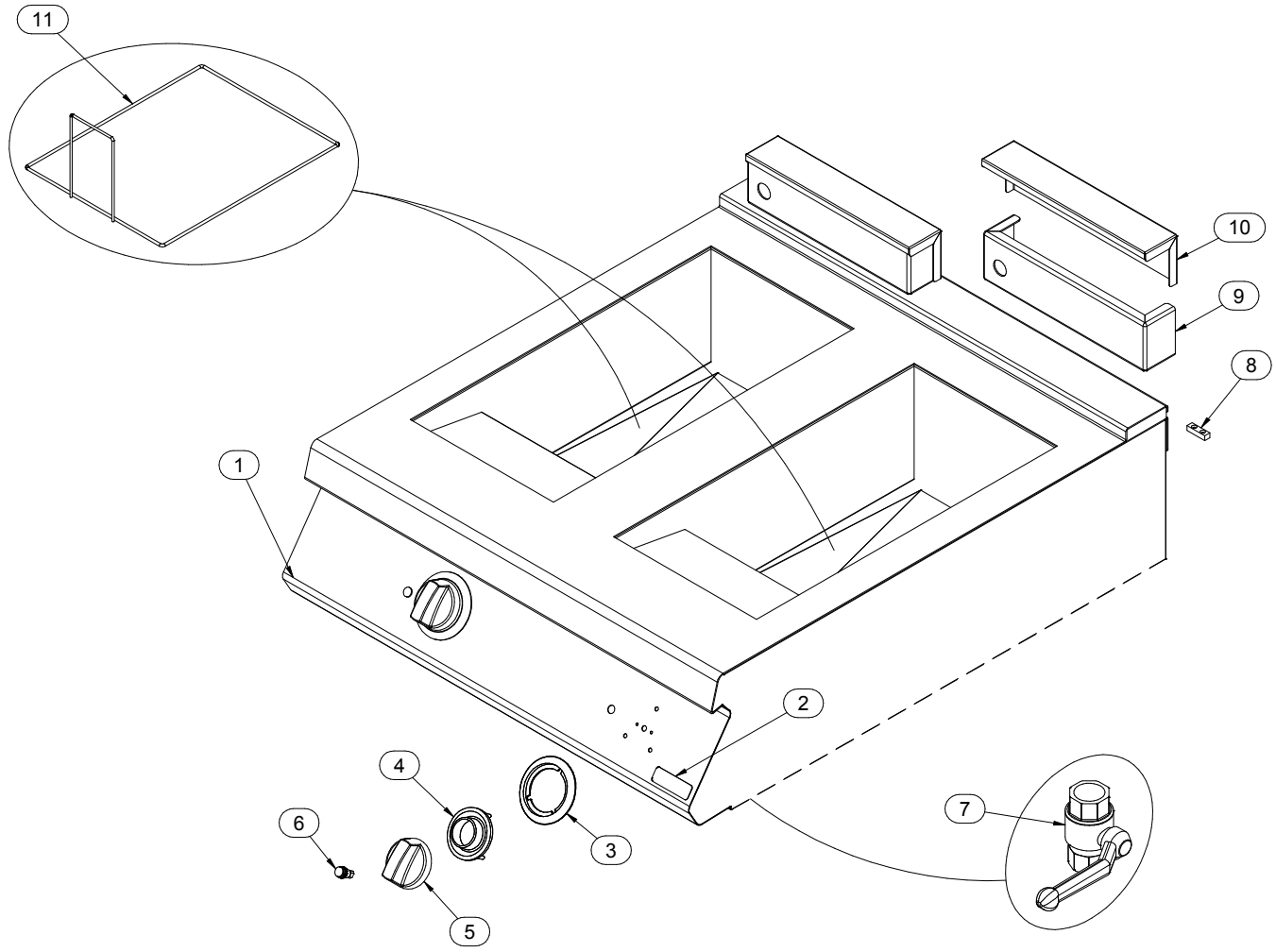

Mod./Type: **_70/... FRE...X**
_90/... FRE...X

cod./num. 2531921.00

data/date: 26/11/2014

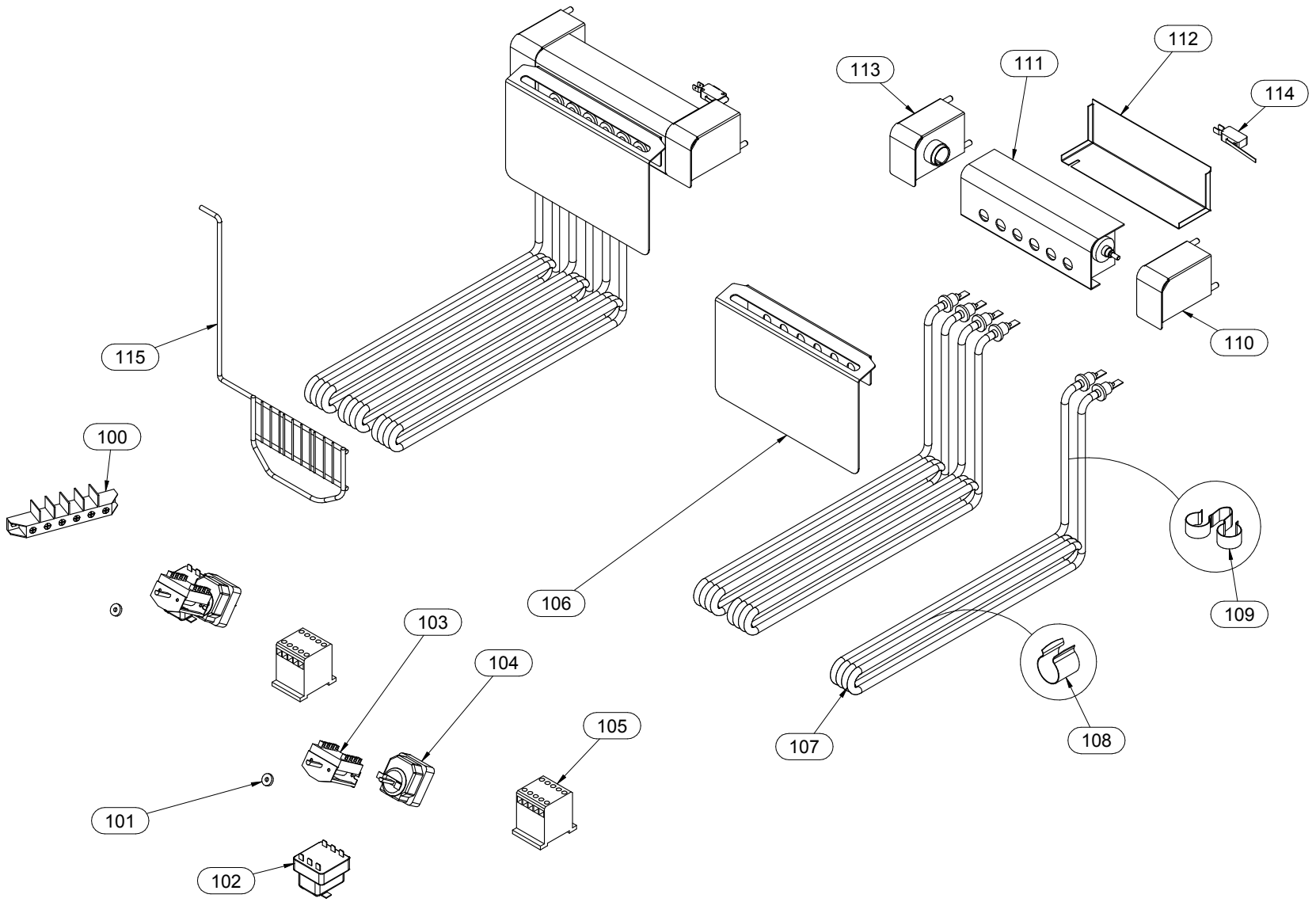

Mod./Type: **_70 - _90 .../40 ... - .../80 ... - .../120 ...**

VANO / CABINET - ...B - ...BE - ...BH2

cod./num. 2531775.00

data/date: 05/11/2014

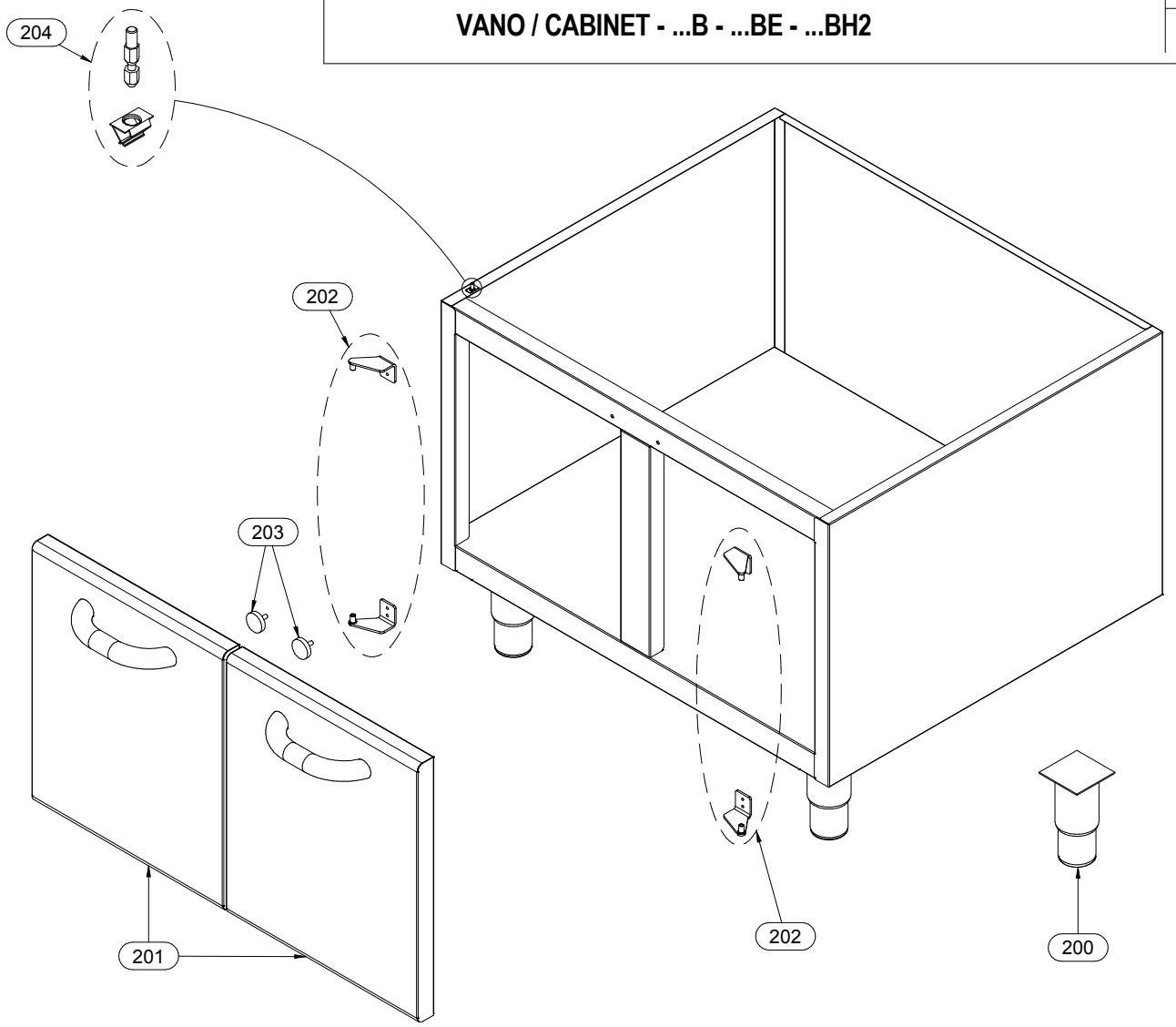

Mod.:	_70/… FRE …X _90/… FRE …X			cod. / num. 2532172.00 data / date 04/05/2015 rif. / ref. 2532171.00		RICAMBI CONSIGLIATI - RECOMMENDED SPARE PARTS - PIECES DETACHEES RECOMMANDEES - EMPFOHLENEN ERSATZTEILE	PK70/40 FRE 10X	PK70/80 FRE 10X	PK90/40 FRE 15X	PK90/80 FRE 15X	NOTE	
POS.	DESCRIZIONE	DESCRIPTION	DENOMINATION	BENENNUNG	COD.		Q. ty					
1	CRUSCOTTO	CONTROL PANEL	BANDEAU	BEDIENBLENDE	9111555.00		1		1			
					9111556.00			1		1		
2	MARCHIO	BRAND NAME	MARQUE	MARKENZEICHEN	682.008.00		1	1	1	1	FROM: 01.01.2014	TO:11.05.2015
					682.008.13		1	1	1	1	FROM: 12.05.2015	TO:…
3	SERIGRAFIA	SCREEN PRINT	SÉRIGRAPHIE	SIEBDRUCK	910.174.00		1	2	1	2		
4	LABIRINTO	LABYRINTH	LABYRINTHE	LABYRINTH	256.218.00		1	2	1	2		
5	MANOPOLA	KNOB	BOUTON	DREHKNOPF	951.071.00	*	1	2	1	2		
6	LAMPADA SPIA ARANCIO	ORANGE INDICATOR LIGHT	LAMPE TEMOIN ORANGE	ORANGE KONTROLLAMPE	963.013.00		1	2	1	2		
7	VALVOLA	VALVE	SOUPAPE	VENTIL	678.007.00		1	2	1	2		
8	PIASTRINA GIUNZIONE	FIXING PLATE	PLAQUETTE FIXAGE	BEFESTIGUNGSPLATTE	941.130.00		1	1	1	1		
9	ALZATINA	UPSTAND	DOSSERET	AUFKANTUNG	6211990.00		1	2	1	2		
10	COPERCHIO	LID	COUVERCLE	DECKEL	6211991.00		1	2	1	2		
11	FILTRO	FILTER	FILTER	FILTER	683.001.23		1	2				
					983.010.00				1	2		
12												
13												
14												
15												
16												
17												
18												
19												
20												
21												
22												
23												
24												
25												
26												
27												
28												
29												
30												
31												
32												
33												
34												
35												
36												
37												
38												

Mod.:	_70/… FRE…X _90/… FRE…X			cod. / num. 2531922.00 data / date 27/11/2014 rif. / ref. 2531921.00		_70/40 FRE10X	_70/80 FRE10X	_90/40 FRE15X	_90/80 FRE15X	NOTE
POS.	DESCRIZIONE	DESCRIPTION	DENOMINATION	BENENNUNG	COD.	Q.ty				
100	MORSETTIERA	TERMINAL BOARD	BORNES	KLEMMENBRETT	963.007.00	1	1	1	1	
101	GUARNIZIONE	WASHER	GUARNITURE	DICHTUNGSRING	953.020.00	1	2	1	2	
102	TERMOSTATO SICUREZZA	SAFETY THERMOSTAT	THERMOSTAT DE SECURITÉ	TEMPERATURBEGRENZER	661.048.00	1	2	1	2	
103	COMMUTATORE	CHANGE-OVER SWITCH	COMMUTATEUR	UMSCHALTER	661.000.00	1	2	1	2	
104	TERMOSTATO	THERMOSTAT	THERMOSTAT	THERMOSTAT	661.041.00	1	2	1	2	
105	CONTATTORE	CONTACTOR	CONTACTEUR	FERNSCHALTER	461.021.00	1	2	1	2	
106	PROTEZIONE	PROTECTION	PROTECTION	SCHUTZ	6211992.00	1	2			
					9211634.00			1	2	
107	RESISTENZA	HEATING ELEMENT	RESISTANCE	HEINZELEMENT	665.089.00	3	6			
					965.009.00			3	6	
108	CLIPS BULBO	BULB CLIPS	CLIPS DU BULB	CLIPS GLÜHBIRNE	238.003.00	4	8	4	8	
109	CLIPS CAPILLARE	CAPILLARY CLIPS	CLIPS CAPILLAIRE	CLIPS KAPILLARE	238.002.00	3	6	3	6	
110	COLONNINA DESTRA	RIGHT COLUMN	COLONNE DE DROITE	LINKE SÄULE	256.420.00	1	2	1	2	
111	SUPPORTO RESISTENZE	HEATING ELEMENTS SUPPORT	SUPPORT ÉLÉMENTS CHAUFFANTS	HEIZELEMENTE TRÄGER	256.419.00	1	2	1	2	
112	PROTEZIONE	PROTECTION	PROTECTION	SCHUTZ	621.106.00	1	2	1	2	
113	COLONNINA SINISTRA	LEFT COLUMN	COLONNE DE GAUCHE	RECHTE SÄULE	611.042.00	1	2	1	2	
114	MICROINTERRUTTORE	MICROSWITCH	MICROINTERRUPTEUR	SICHERUNGSSCHALTER	761.004.00	1	2	1	2	
115	BLOCCO RESISTENZE	HEATING ELEMENTS LOCK	BLOCAGE ÉLÉMENTS CHAUFFANTS	HEIZELEMENTEBLOCKIERUNG	683.007.00	1	2			
					983.009.00			1	2	
116										
117										
118										
119										
120										
121										
122										
123										
124										
125										
126										
127										
128										
129										
130										
131										
132										
133										
134										
135										
136										
137										

Mod.:	_70/... - _90/... VANO / CABINET ...B - ...BE - ...BH2			cod. / num. 2531776.00 data / date 05/11/2014 rif. / ref. 2531775.00		RICAMBI CONSIGLIATI - RECOMMENDED SPARE PARTS - PIECES DETACHÉES RECOMMANDÉES - EMPFOHLENEN ERSATZTEILE	PK70/40 ...	PK70/80 ...	PK70/120 ...	PK90/40 ...	PK90/80 ...	PK90/120 ...	NOTE
POS.	DESCRIZIONE	DESCRIPTION	DENOMINATION	BENENNUNG	COD.		Q. ty						
200	PIEDINO	FOOT	PIED	STELLFUSS	912.090.14		4	4	4	4	4	4	
201	PORTA	DOOR	PORTE	TÜR	256.380.00		1	2	3	1	2	3	
202	COPPIA CERNIERE	GASKETS PAIR	COUPLE CHARNIÈRES	SCHARNIERPAAR	256.216.00		1	2	3	1	2	3	
203	MAGNETE	MAGNET	MAGNÉTO	MAGNET	984.006.00		1	2	3	1	2	3	
204	FISSAGGIO	FIXING	FIXAGE	BEFESTIGUNG	256.431.00		4	4	4	4	4	4	FROM: 04.05.2015 TO:...
205													
206													
207													
208													
209													
210													
211													
212													
213													
214													
215													
216													
217													
218													
219													
220													
221													
222													
223													
224													
225													
226													
227													
228													
229													
230													
231													
232													
233													
234													
235													
236													
237													
238													
239													