Mod./Type:	_70/... GRACQG - _90/... GRACQG EXTREME	cod./num.	2531695.00
		data/date:	18/06/2014

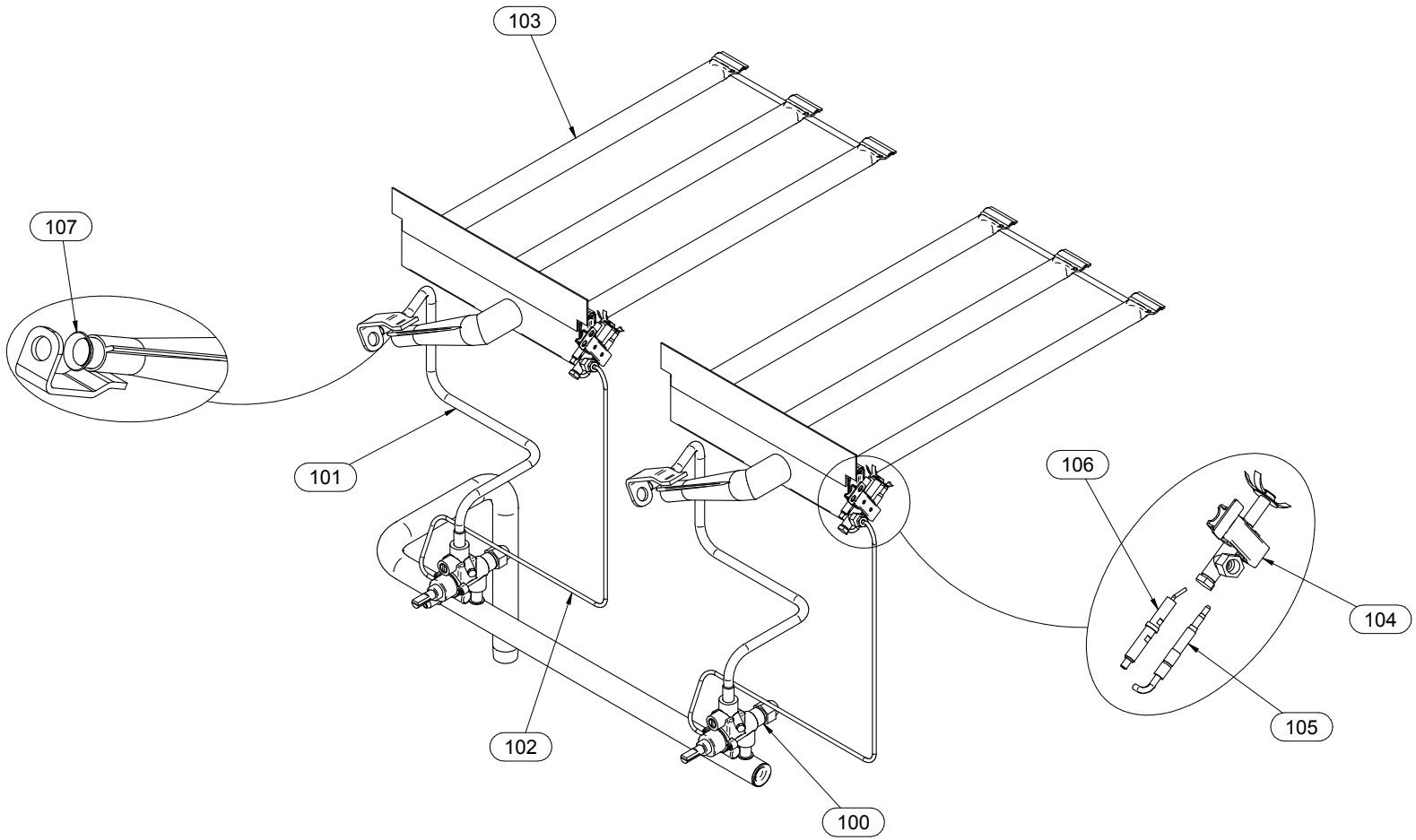

Mod./Type:	_90/... GRACQG EXTREME	cod./num.	2531746.00
		data/date:	30/06/2014

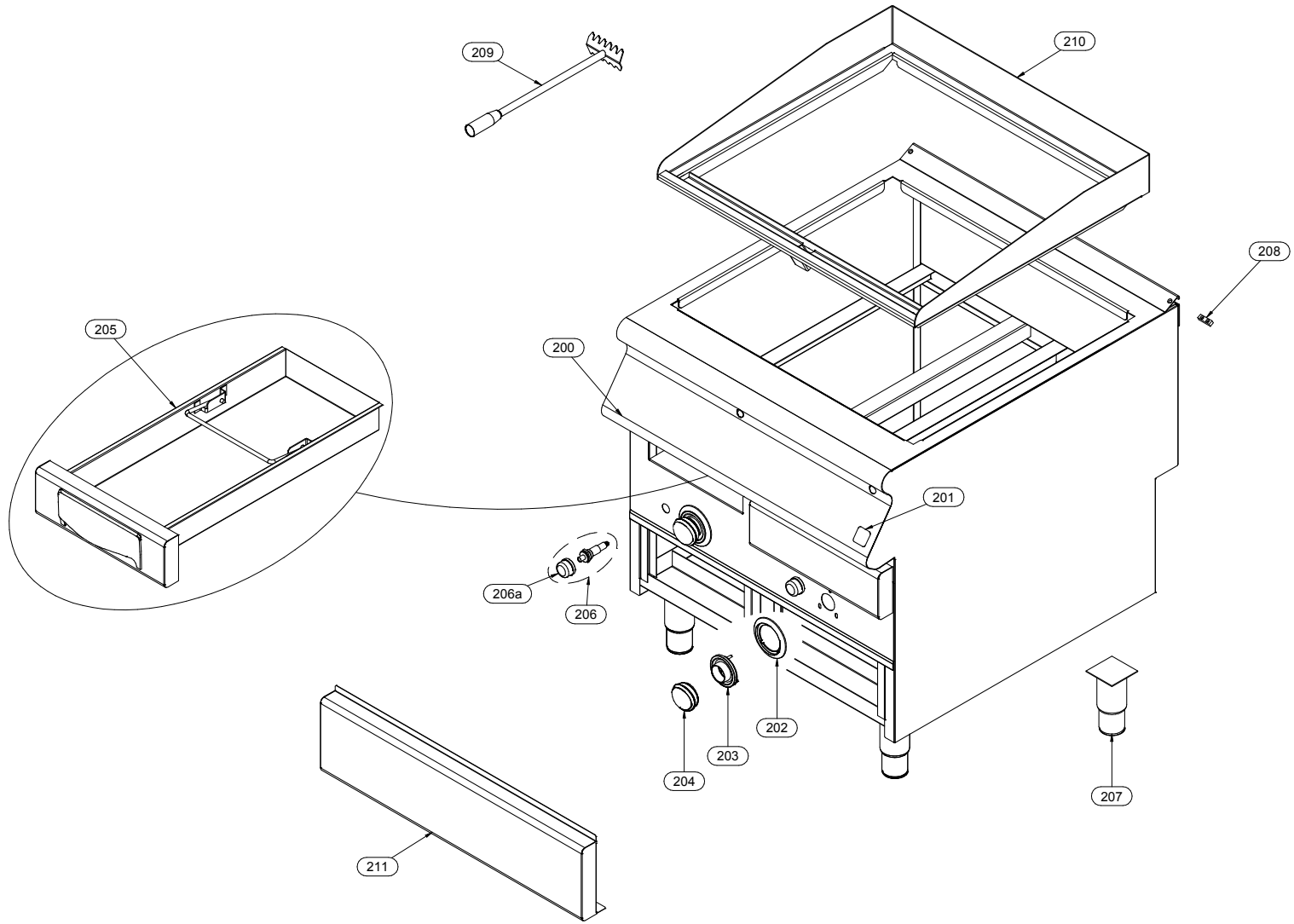

Mod.:	_70/... GRACQG - _90/... GRACQG EXTREME			cod. / num. 2531696.00 data / date 19/06/2014 rif. / ref. 2531695.00		_70/40 GRACQG	_70/80 GRACQG	_90/40 GRACQG	_90/80 GRACQG	NOTE
POS.	DESCRIZIONE	DESCRIPTION	DENOMINATION	BENENNUNG	COD.	Q. ty				
100	RUBINETTO GAS	GAS TAP	ROBINET GAZ	GASHAHN	671.031.00	1	2	1	2	
101	TUBO GAS	GAS PIPE	TUBE GAZ	GASROHR	256.296.00	1	2	1	2	
102	TUBO GAS	GAS PIPE	TUBE GAZ	GASROHR	256.297.00	1	2	1	2	
103	BRUCIATORE	BURNER	BRULEUR	BRENNER	672.174.00	1	2			
					972.043.00			1	2	
104	GRUPPO PILOTA	PILOT GROUP	GROUPE VEILLEUSE	ZÜNDBRENNER GRUPPE	672.057.00	1	2	1	2	
105	TERMOCOPPIA	THERMOCOUPLE	THERMOCOUPLE	THERMOELEMENT	672.099.00	1	2	1	2	
106	CANDELA ACCENSIONE	IGNITION ELECTRODE	BOUGIE D'ALLUMAGE	KERZE SCHNELLBRENNER	672.060.00	1	2	1	2	
107	BOCCOLA REGOLAZIONE ARIA	AIR REGULATION BUSHING	BAGUE DE RÉGULATION AIR	LUFTREGLERBÜCHSE	672.021.00	1	2	1	2	
108										
109										
110										
111										
112										
113										
114										
115										
116										
117										
118										
119										
120										
121										
122										
123										
124										
125										
126										
127										
128										
129										
130										
131										
132										
133										
134										
135										

Mod.:	_70/... GRACQG EXTREME			cod. / num. 2531694.00 data / date 18/06/2014 rif. / ref. 2531693.00		EM70/40 GRACQ	EM70/80 GRACQ	NOTE	
POS.	DESCRIZIONE	DESCRIPTION	DENOMINATION	BENENNUNG	COD.	Q.ty			
200	CRUSCOTTO	CONTROL PANEL	BANDEAU	BEDIENBLENDE	6111296.00	1			
					6111297.00		1		
201	MARCHIO	BRAND NAME	MARQUE	MARKENZEICHEN	982.021.00	1	1	**FROM: 15.12.2011**	**TO: 31.01.2014**
					982.023.00	1	1	**FROM: 01.02.2014**	**TO:...**
202	SERIGRAFIA	SCREEN PRINT	SÉRIGRAPHIE	SIEBDRUCK	910.163.00	1	2		
203	LABIRINTO	LABYRINTH	LABYRINTHE	LABYRINTH	256.235.00	1	2		
204	MANOPOLA	KNOB	BOUTON	DREHKNOPF	256.229.00	1	2		
205	CASSETTO	DRAWER	TIROIR	SCHUBLADE	610.245.00	1	2		
206	ASSIEME PIEZO	PIEZO ASSEMBLY	ENSEMBLE PIÉZO	PIEZO-GRUPPE	912.091.00	1	2		
206a	CAPPUCCIO	CAP	CAPUCHON	KAPPE	951.047.00	1	2		
207	PIEDINO	FOOT	PIED	STELLFUSS	912.090.00	4	4	**FROM: 15.12.2011**	**TO: 17.05.2013**
					912.090.14	4	4	**FROM: 18.05.2013**	**TO:...**
208	PIASTRINA GIUNZIONE	FIXING PLATE	PLAQUETTE FIXAGE	BEFESTIGUNGSPLATTE	941.130.00	1	1		
209	RASCHIETTO	SCRAPER	RACLETTE	SCHABER	610.272.00	1	1		
210	PARASPRUZZI	SPLASH GUARD	PROTECCION ANTI-ÉCLABOUSSURES	SPRITZSCHUTZ	6111276.00	1			
					6111277.00		1		
211	FACCIATA INFERIORE	FRONT LOWER PART	PARTIE FRONTALE INFÉRIEUR	UNTERE SEITE	6211544.00	1			
					6211549.00		1		
212									
213									
214									
215									
216									
217									
218									
219									
220									
221									
222									
223									
224									
225									
226									
227									
228									

Mod.:	_90/... GRACQG			cod. / num. 2531748.00 data / date 30/06/2014 rif. / ref. 2531746.00		RICAMBI CONSIGLIATI - RECOMMENDED SPARE PARTS - PIECES DETACHÉES RECOMMANDÉES - EMPFOHLENEN ERSATZTEILE	EM90/40 GRACQG	EM90/80 GRACQG	NOTE	
POS.	DESCRIZIONE	DESCRIPTION	DENOMINATION	BENENNUNG	COD.		Q.ty			
200	CRUSCOTTO	CONTROL PANEL	BANDEAU	BEDIENBLENDE	6111296.00		1			
					6111297.00			1		
201	MARCHIO	BRAND NAME	MARQUE	MARKENZEICHEN	982.021.00		1	1	**FROM: 15.12.2011**	**TO: 31.01.2014**
					982.023.00		1	1	**FROM: 01.02.2014**	**TO:...**
202	SERIGRAFIA	SCREEN PRINT	SÉRIGRAPHIE	SIEBDRUCK	910.163.00		1	2		
203	LABIRINTO	LABYRINTH	LABYRINTHE	LABYRINTH	256.235.00		1	2		
204	MANOPOLA	KNOB	BOUTON	DREHKNOPF	256.229.00	*	1	2		
205	CASSETTO	DRAWER	TIROIR	SCHUBLADE	910.264.00		1	2		
206	ASSIEME PIEZO	PIEZO ASSEMBLY	ENSEMBLE PIÉZO	PIEZO-GRUPPE	912.091.00		1	2		
206a	CAPPUCCIO	CAP	CAPUCHON	KAPPE	951.047.00		1	2		
207	PIEDINO	FOOT	PIED	STELLFUSS	912.090.00		4	4	**FROM: 15.12.2011**	**TO: 17.05.2013**
					912.090.14		4	4	**FROM: 18.05.2013**	**TO:...**
208	PIASTRINA GIUNZIONE	FIXING PLATE	PLAQUETTE FIXAGE	BEFESTIGUNGSPLATTE	941.130.00		1	1		
209	RASCHIETTO	SCRAPER	RACLETTE	SCHABER	610.272.00		1	1		
210	PARASPRUZZI	SPLASH GUARD	PROTECCION ANTI-ÉCLABOUSSURES	SPRITZSCHUTZ	9111366.00		1			
					9111367.00			1		
211	FACCIATA INFERIORE	FRONT LOWER PART	PARTIE FRONTALE INFÉRIEUR	UNTERE SEITE	6211544.00		1			
					6211549.00			1		
212										
213										
214										
215										
216										
217										
218										
219										
220										
221										
222										
223										
224										
225										
226										
227										
228										
229										
230										
231										