DESPIECE TECNICO

# Cocinas a gas con horno eléctrico
# Gas ranges with electric oven
# Fourneaux à gaz avec four électrique
# Gas-herde mit elektro-backofen
# Cucina a gas con forno elettrico
# Fogão a gás com forno eléctrico

## GAMA SNACK

## Modelos:

## CGE6-41

***Junio 2009 June***

***Revisado Mayo 2013 May Revised***

FAGOR

FAGOR INDUSTRIAL

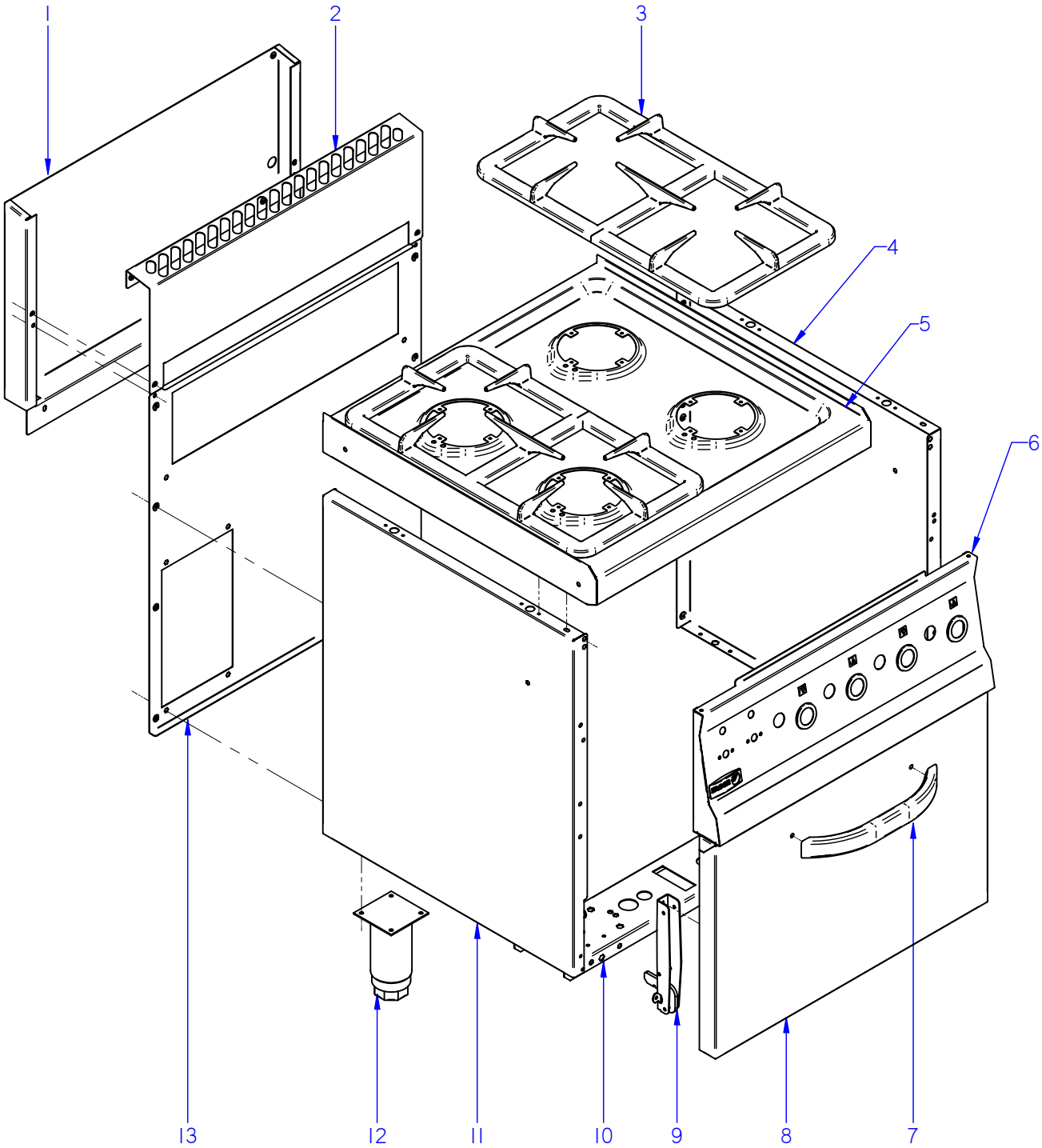


ITEM MARCADO EN COLOR = REPUESTO RECOMENDADO
COLOURED ITEM = RECOMMENDED SPARE PART

| N plano | Firma | Fecha | Aparato | MUEBLE | Lamina | |
|---|---|---|---|---|---|---|
| C-2380 | | 2009-06 | COCINA CGE6-41 | | 1 | Fagor Industrial S.Coop. FAGOR Oñate |

| MOD. | COCINAS /RANGES | ZONA | MUEBLE / UNIT | PLANO | C-2380 |
|---|---|---|---|---|---|

| ITEM | CODIGO | DENOMINACION | TEXTO | CGE6-41 | | | | | | | NOTAS |
|---|---|---|---|---|---|---|---|---|---|---|---|
| 1 | J042801000 | PROTECCION CHIMENEA POST. | PROTECTION CHIMEMEY POS. | 1 | | | | | | | |
| | Q419005000 | REMACHE 4X8 ALMG3 / ALUMINIO | RIVET 4X8 ALMG3 / ALUMINIUM | 2 | | | | | | | |
| 2 | J142813000 | PROTECCION CHIMENEA ANT. 600 | PROTECTION CHIMENEY ANT | 1 | | | | | | | ELIMINADA 01.04.2010 |
| 2 | J142830000 | PROTECCION CHIMENEA ANT. 600 | PROTECTION CHIMENEY ANT | 1 | | | | | | | INTRODUC. 01.04.2010 |
| | Q012031000 | TORNILLO EXAGONAL M5x10 A304 | HEXAGONAL BOLT M5x10 A304 | 4 | | | | | | | |
| | Q302022000 | ARANDELA 16x6x1,2 A304 | WASHER 16x6x1.2 A304 | 4 | | | | | | | |
| 3 | J015405000 | PARRILLA SNACK | PARRILLA SNACK | 2 | | | | | | | |
| 4 | J022802000 | PANEL LATERAL DCHO CG6-41 | LATERAL RIGHT RANGE CG6-41 | 1 | | | | | | | ELIMINADA 01.04.2010 |
| 4 | J022816000 | PANEL LATERAL DCHO CG6-41 | LATERAL RIGHT RANGE CG6-41 | 1 | | | | | | | INTRODUC. 01.04.2010 |
| | Q419005000 | REMACHE 4X8 ALMG3 / ALUMINIO | RIVET 4X8 ALMG3 / ALUMINIUM | 4 | | | | | | | |
| | X010503000 | CIERRE MUELLE | LOCK SPRING | 2 | | | | | | | ELIMINADA 01.04.2010 |
| | Z442918000 | CLIP CIERRE | LOCK SPRING | 2 | | | | | | | INTRODUC. 01.04.2010 |
| | Q419007000 | REMACHE TUBULAR C/V D3.2X6 | TUBULAR RIVET C/V D3.2X6 | 4 | | | | | | | |
| 5 | J015411000 | ENCIMERA CG6-40 COMPL. | TOP CG6-40 COMPL. | 1 | | | | | | | |
| | Q221342000 | REMACHE EXAGONAL M5 | HEXAGONAL RIVET M5 | 4 | | | | | | | |
| | X012612000 | PITON CIERRE | LOCK SPIKE | 4 | | | | | | | ELIMINADA 01.04.2010 |
| | Z442919000 | PITON CIERRE | LOCK SPIKE | 4 | | | | | | | INTRODUC. 01.04.2010 |
| | Q221342000 | REMACHE EXAGONAL M5 | HEXAGONAL RIVET M5 | 2 | | | | | | | |
| 6 | J052802000 | PORTAMANDOS COMPL. CGE6-41 | CONTROL HOLDER CGE6-41 | 1 | | | | | | | |
| | U022836000 | ESCUDO FAGOR | FAGOR EMBLEM | 1 | | | | | | | |
| | Q221023000 | CLIP SUJECIÓN RÁPIDA Ø5 | RAPID CONNECT CLIP Ø5 | 2 | | | | | | | |
| | Q419005000 | REMACHE 4x8 ALMG3 / ALUMINIO | RIVET 4X8 ALMG3 / ALUMINIUM | 6 | | | | | | | |
| | Q012031000 | TORNILLO EXAGONAL M5x10 A304 | HEXAGONAL BOLT M5x10 A304 | 2 | | | | | | | |
| | Q302022000 | ARANDELA 16x6x1,2 A304 | WASHER 16x6x1.2 A304 | 2 | | | | | | | |
| 7 | Z400542000 | ASA LVS. | HANDLE LVS. | 1 | | | | | | | |
| | Q012041000 | TORNILLO EXAGONAL M6x10 | HEXAGONAL BOLT M6x10 | 2 | | | | | | | |
| | Q302022000 | ARANDELA 16x6x1,2 A304 | WASHER 16x6x1.2 A304 | 2 | | | | | | | |
| | **1100003427** | **KIT PUERTA DE HORNO** | **OVEN DOOR KIT** | | | | | | | | |
| 8 | J040501000 | PUERTA DE HORNO | OVEN DOOR | 1 | | | | | | | |
| 9 | U020528000 | BISAGRA CIERRE HORNO | OVEN LOCK HINGE | 2 | | | | | | | |
| | Q152022000 | TORNILLO M6x8 | BOLT M6x8 | 6 | | | | | | | |

| MOD. | COCINAS /RANGES | ZONA | MUEBLE / UNIT | PLANO | C-2380 |
|---|---|---|---|---|---|

| ITEM | CODIGO | DENOMINACION | TEXTO | CGE6-41 | | | | | | | NOTAS |
|---|---|---|---|---|---|---|---|---|---|---|---|
| 10 | J002613000 | LISTON SOPORTE PATAS | TIEDOWN SUPPORTS MB6-40 | 2 | | | | | | | |
| | Q221343000 | REMACHE EXAGONAL M6 | HEXAGONAL RIVET M6 | 4 | | | | | | | |
| 11 | J022801000 | PANEL LATERAL IZDO. CG6-41 | LATERAL LEFT RANGE CG6-41 | 1 | | | | | | | ELIMINADA 01.04.2010 |
| 11 | J022815000 | PANEL LATERAL IZDO. CG6-41 | LATERAL LEFT RANGE CG6-41 | 1 | | | | | | | INTRODUC. 01.04.2010 |
| | Q419005000 | REMACHE 4X8 ALMG3 / ALUMINIO | RIVET 4X8 ALMG3 / ALUMINIUM | 4 | | | | | | | |
| | X010503000 | CIERRE MUELLE | LOCK SPRING | 2 | | | | | | | ELIMINADA 01.04.2010 |
| | Z442918000 | CLIP CIERRE | LOCK SPRING | 2 | | | | | | | INTRODUC. 01.04.2010 |
| | Q419007000 | REMACHE TUBULAR C/V D3.2X6 | TUBULAR RIVET C/V D3.2X6 | 4 | | | | | | | |
| | Q221342000 | REMACHE EXAGONAL M5 | HEXAGONAL RIVET M5 | 1 | | | | | | | |
| 12 | X260151000 | PATA REGULABLE | ADJUSTABLE LEG | 4 | | | | | | | |
| 13 | J052804000 | PANEL POSTERIOR CE6-41 | REAR PANEL CE6-41 | 1 | | | | | | | |
| | Q419005000 | REMACHE 4X8 ALMG3 / ALUMINIO | RIVET 4X8 ALMG3 / ALUMINIUM | 8 | | | | | | | |
| | Q221342000 | REMACHE EXAGONAL M5 | HEXAGONAL RIVET M5 | 2 | | | | | | | |

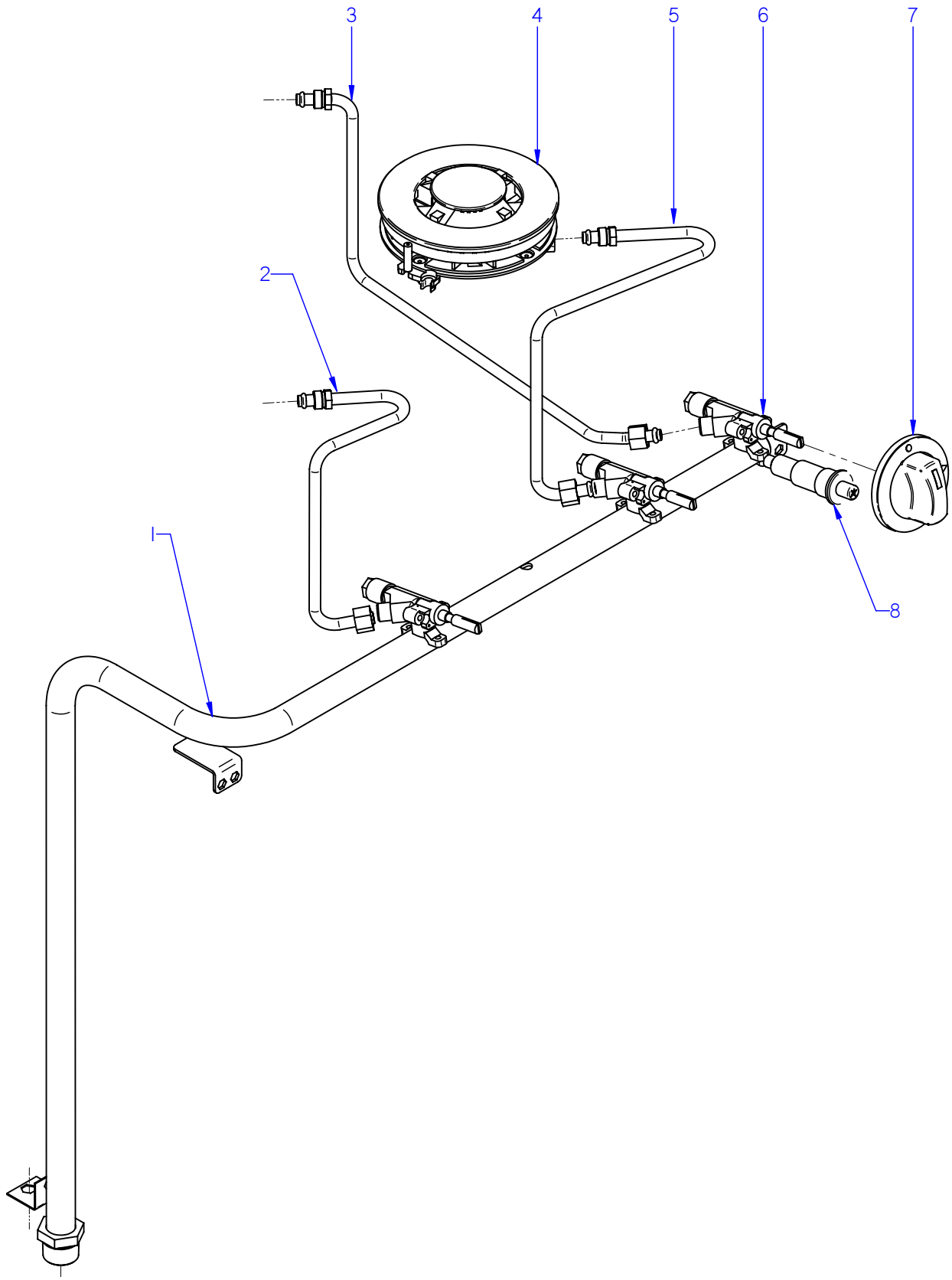


ITEM MARCADO EN COLOR = REPUESTO RECOMENDADO
COLOURED ITEM = RECOMMENDED SPARE PART

| N plano | Firma | Fecha | Aparato | CONJUNTO FUNCIONAL GAS | Lamina | |
|---|---|---|---|---|---|---|
| C-2381 | | 2009-06 | COCINA CGE6-41 | | 2 | Fagor Industrial S.Coop. FAGOR Oñate |

| MOD. | COCINAS /RANGES | ZONA | CONJUNTO FUNCIONAL GAS<br>FUNCTIONAL UNIT GAS | PLANO | C-2381 |
|---|---|---|---|---|---|

| ITEM | CODIGO | DENOMINACION | TEXTO | CGE6-41 | | | | | | | |
|---|---|---|---|---|---|---|---|---|---|---|---|
| 1 | J055002000 | CONDUCCION GENERAL CG6-41 | GENERAL PIPE CG6-41 | 1 | | | | | | | ELIMINADA 02.11.2009 |
| 1 | J055005000 | CONDUCCION GENERAL CG6-41 | GENERAL PIPE CG6-41 | 1 | | | | | | | INTRODUC. 02.11.2009 |
| | Q012042000 | TORNILLO EXAGONAL M6X15 | HEXAGONAL BOLT M6X15 | 3 | | | | | | | |
| | Q302022000 | ARANDELA 16x6x1,2 A304 | WASHER 16x6x1.2 A304 | 3 | | | | | | | |
| | Q221342000 | REMACHE EXAGONAL M5 | HEXAGONAL RIVET M5 | 2 | | | | | | | |
| | Q012031000 | TORNILLO EXAGONAL M5x15 A304 | HEXAGONAL BOLT M5x15 A304 | 2 | | | | | | | |
| | Q221343000 | REMACHE EXAGONAL M6 | HEXAGONAL RIVET M6 | 1 | | | | | | | |
| 2 | J025015000 | COND. QUEMADOR ANTER. IZDO. | COND. LEFT FRONT BURNER. | 1 | | | | | | | |
| 3 | J015015000 | COND. QUEMADOR POSTERIOR | COND. REAR BURNER | 2 | | | | | | | |
| 4 | J015702000 | SUPERIOR QUEMADOR BSI | TOP BURNER BSI | 4 | | | | | | | |
| S/Nº | J015710000 | BASE QUEMADOR C/TOBERA | BURNER BASE W/NOZZLE | 4 | | | | | | | |
| S/Nº | J015708000 | INYECTOR G30/29 G-N | INJECTOR G30/29 G-N | 4 | | | | | | | |
| S/Nº | J012104000 | TERMOPAR L=650 COCINA SNACK | THERMOCOUPLE L=650 COOKEI | 4 | | | | | | | |
| | Q161371000 | TUERCA EXAGONAL M6X0,75 | HEXAGONAL NUT M6X0,75 | 4 | | | | | | | |
| S/Nº | J015705000 | TAPA SUPERIOR Ø127 | UPPER COVER Ø127 | 4 | | | | | | | ELIMINADA 28.11.11 |
| S/Nº | 12041540 | CONJ-SUPERIOR-QUEMADOR-BSI | BURNER SET-TOP-BSI | 4 | | | | | | | INTRODUC. 28.11.11 |
| S/Nº | J015704000 | TAPON SUPERIOR Ø55 | UPPER LID Ø55 | 4 | | | | | | | ELIMINADA 28.11.11 |
| | Q032012000 | TORNILLO ALOMADO M3X15 | CURVED SCREW M3X15 | 16 | | | | | | | |
| 5 | J025013000 | COND. QUEMADOR ANTER. DCHO. | COND. RIGHT FRONT BURNER. | 1 | | | | | | | |
| 6 | J012101000 | GRIFO CAL 20703 | TAP CAL 20703 | 4 | | | | | | | |
| S/Nº | U982018000 | BRIDA AMARRE TERMOSTATO | FASTENING FLANGE TERMOST | 4 | | | | | | | |
| | Q011353000 | TORNILLO EXAGONAL M5X30 | HEXAGONAL BOLT M5X30 | 8 | | | | | | | |
| 7 | J012102000 | MANDO COCINA SNACK GAS | BOTON RANGE GAS SNACK | 4 | | | | | | | |
| 8 | S113034000 | PIEZOELECTRICO | PIEZOELECTRIC | 4 | | | | | | | ELIMINADO 02.05.12 |
| 8 | 12043897 | PIEZOELECTRICO COMPLETO | COMPLETE PIEZOELECTRIC | 4 | | | | | | | INTRODUCIDO 02.05.12 |
| S/Nº | 12043907 | ANILLO ADAPTADOR | ADAPTER RING | 4 | | | | | | | INTRODUCIDO 02.05.12 |
| S/Nº | U333003000 | CABLE MASA ENCENDEDOR | LIGHTER EARTH CABLE | 4 | | | | | | | ELIMINADO 02.05.12 |
| S/Nº | R613030000 | CABLE BUJIA | SPARK PLUG CABLE | 2 | | | | | | | ELIMINADA 01.07.2010 |
| S/Nº | U323007000 | CABLE ENCENDEDOR BUJIA | LIGHTER SPARK PLUG CABLE | 2 | | | | | | | INTRODUCIDO 01.07.2010 |
| | | | | | | | | | | | |
| | | | | | | | | | | | |

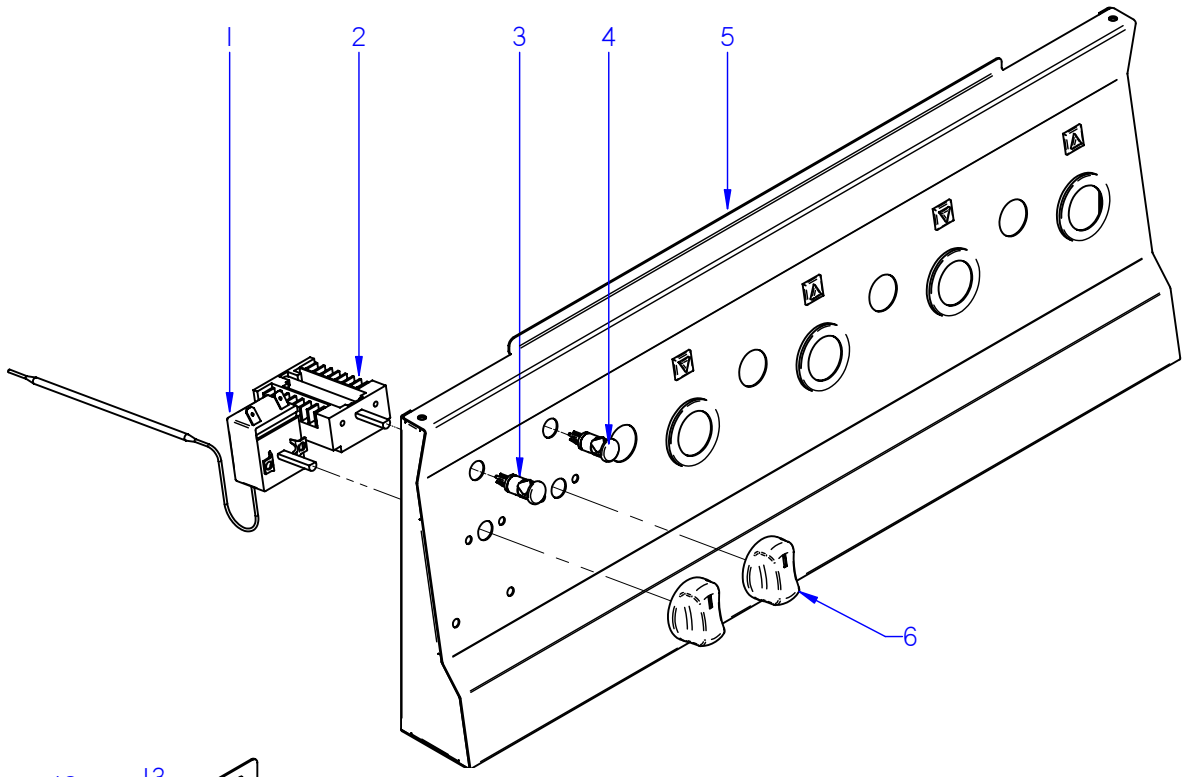


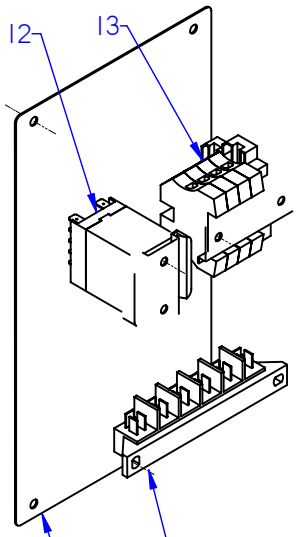


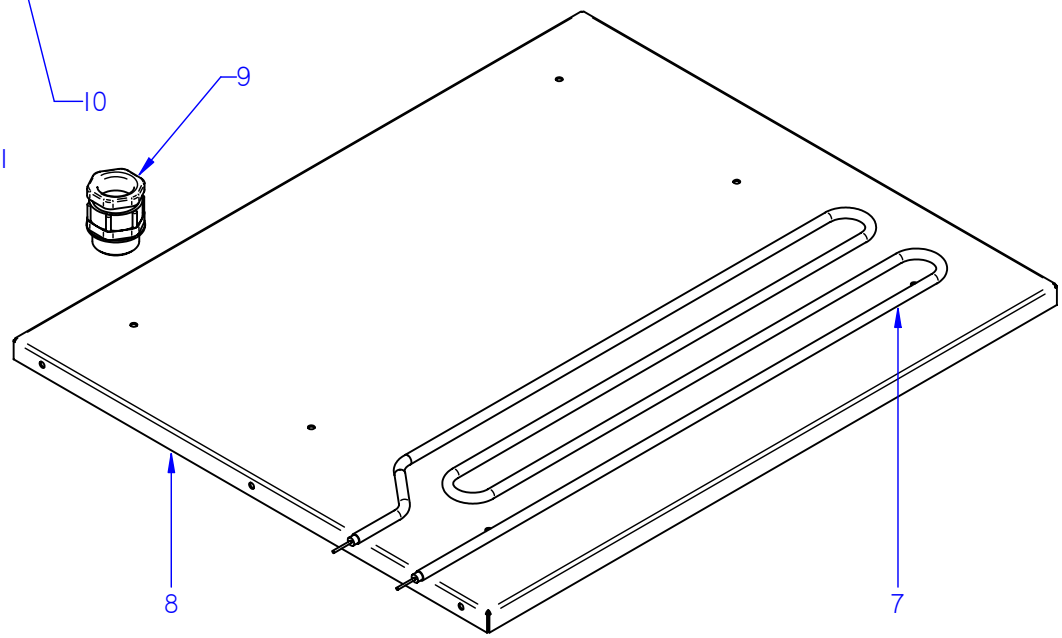


ITEM MARCADO EN COLOR = REPUESTO RECOMENDADO
COLOURED ITEM = RECOMMENDED SPARE PART

| N plano | Firma | Fecha | Aparato | Lamina | |
|---|---|---|---|---|---|
| C-2382 | | 2009-06 | CONJUNTO FUNCIONAL ELECTRICO<br>COCINA CGE6-41 | 3 | Fagor Industrial S.Coop.<br>Oñate |

| MOD. | COCINAS /RANGES | ZONA | CONJUNTO FUNCIONAL ELECTRICO<br>FUNCTIONAL UNIT ELECTR. | PLANO | C-2382 |
|---|---|---|---|---|---|

| ITEM | CODIGO | DENOMINACION | TEXTO | CGE6-41 | | | | | | | |
|---|---|---|---|---|---|---|---|---|---|---|---|
| 1 | X153000000 | TERMOSTATO 50-310 C | THERMOSTAT 50-310 C | 1 | | | | | | | |
| | Q151320000 | TOR. ALOMADO M4X6 H.ZINCADO | CURVED SCREW M4X6 H. ZINC | 2 | | | | | | | |
| 2 | U673006000 | CONMUTADOR | SWITCH | 1 | | | | | | | |
| | Q151320000 | TOR. ALOMADO M4X6 H.ZINCADO | CURVED SCREW M4X6 H. ZINC | 2 | | | | | | | |
| 3 | R693055000 | PILOTO VERDE 41227000C7 | GREEN PILOT 41227000C7 | 1 | | | | | | | ELIMINADO 01.02.13 |
| 3 | 12047390 | PILOTO VERDE 230V AC 8KW 16MM | GREEN PILOT 230V AC 8KW 16M | 1 | | | | | | | INTRODUCIDO 01.02.13 |
| 4 | R693056000 | PILOTO AMBAR 41227000A4 | AMBER PILOT 41227000A4 | 1 | | | | | | | ELIMINADO 01.02.13 |
| 4 | 12024669 | PILOTO AMBAR Ø18 | AMBER PILOT Ø18 | 1 | | | | | | | INTRODUCIDO 01.02.13 |
| 5 | J052802000 | PORTAMANDOS COMPL. CGE6-41 | CONTROL HOLDER CGE6-41 | 1 | | | | | | | |
| 6 | U952103000 | MANDO Ø6 CGE6-41 | CONTROL CGE6-41 | 2 | | | | | | | |
| 7 | J043002000 | RESISTENCIA 1000W-230V SNACK | RESISTOR 1000W-230V SNACK | 6 | | | | | | | |
| 8 | J042603000 | BASE RESISTENCIAS CE6-41 | SUPP. RESISTORS | 1 | | | | | | | |
| | Q419005000 | REMACHE 4X8 ALMG3 / ALUMINIO | RIVET 4X8 ALMG3 / ALUMINIUM | 8 | | | | | | | |
| 9 | R013022000 | PRENSA ESTOPAS | STUFFING BOX | 1 | | | | | | | |
| 10 | R253044000 | REGLETA AUXILIAR FV-122 | AUXILIARY TERMINAL STRIP FV- | 1 | | | | | | | |
| | Q152004000 | TORNIL. APLASTADO M5X13 A 304 | FLAT HEADED SCREW M5x13 A 3 | 4 | | | | | | | |
| 11 | J052805000 | TAPA POSTERIOR CE6-41 | REAR COVER CE6-41 | 1 | | | | | | | |
| | Q152004000 | TORNIL. APLASTADO M5X13 A 304 | FLAT HEADED SCREW M5x13 A 3 | 4 | | | | | | | |
| 12 | Z213007000 | CONTACTOR 230 V. 50-60 HZ | CONTACTOR 230 V. 50-60 HZ | 1 | | | | | | | |
| | Z123018000 | GUIA CONTACTOR L-55 | CONTACTOR GUIDE L-55 | 1 | | | | | | | |
| | Q419005000 | REMACHE 4X8 ALMG3 / ALUMINIO | RIVET 4X8 ALMG3 / ALUMINIUM | 2 | | | | | | | |
| 13 | P453025000 | BORNES 10 WDU-10203.O | TERMINALS 10 WDU-10203.O | 3 | | | | | | | |
| | P453026000 | BORNE TIER 10 WPE-10103.O | TERMINAL TIER 10 WPE-10103.O | 1 | | | | | | | |
| | U803009000 | BORNA PASO AZUL 16 MM. | BLUE TAP TERMINAL 16 MM. | 1 | | | | | | | |
| | Z263302000 | BORNA PASO AZUL | BLUE TAP TERMINAL | 1 | | | | | | | INTRODUCIDO 21.10.11 |
| | Z263303000 | TOPE FINAL | END STOP | 1 | | | | | | | |
| | Z103083000 | GUIA CONTACTOR L-73 " | CONTACTOR GUIDE L-73 " | 1 | | | | | | | |
| | Q419005000 | REMACHE 4X8 ALMG3 / ALUMINIO | RIVET 4X8 ALMG3 / ALUMINIUM | 2 | | | | | | | |
| | | | | | | | | | | | |
| | | | | | | | | | | | |
| | | | | | | | | | | | |

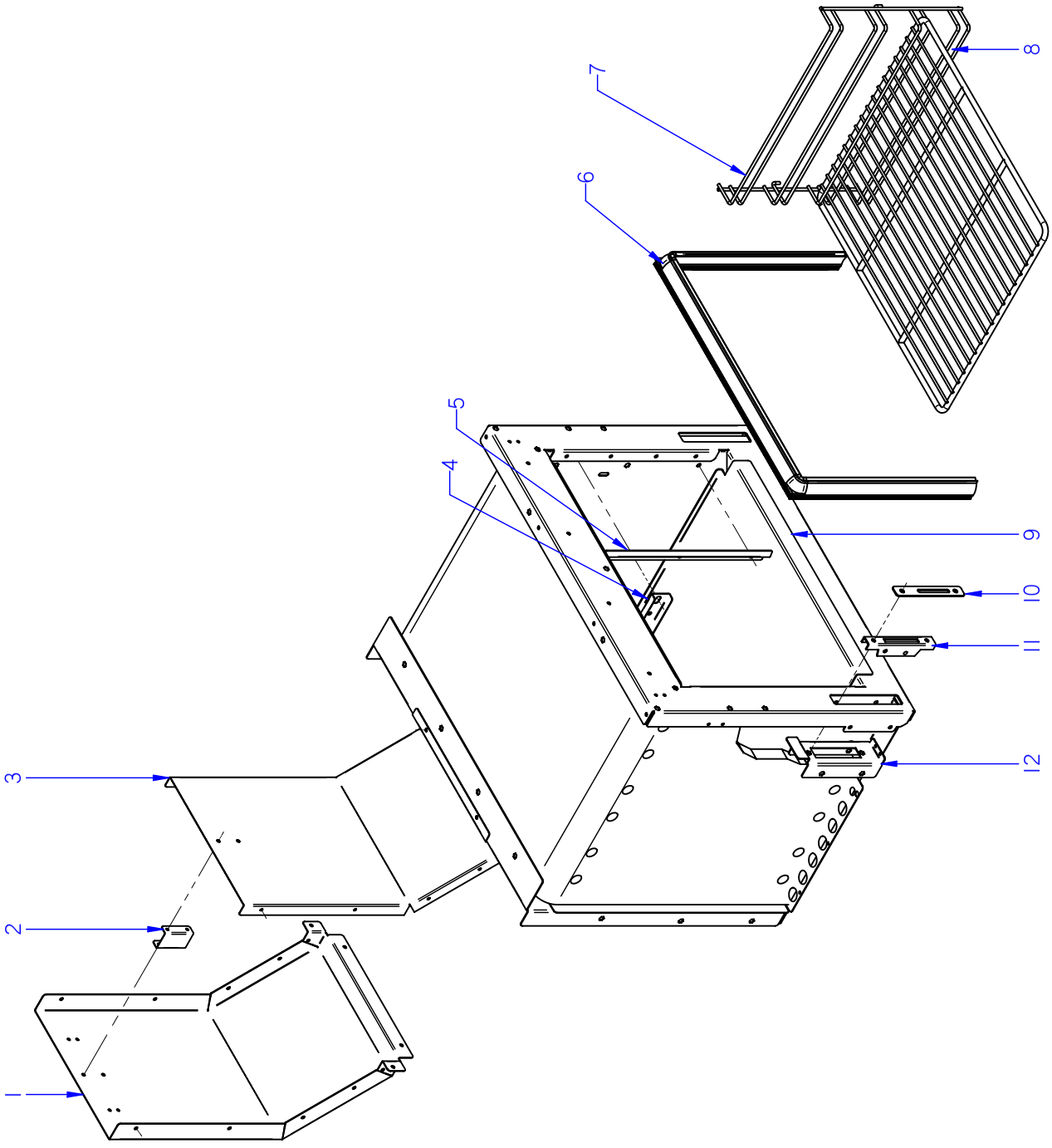


ITEM MARCADO EN COLOR = REPUESTO RECOMENDADO
COLOURED ITEM = RECOMMENDED SPARE PART

| N plano | Firma | Fecha | Aparato | HORNO | Lamina | |
|---|---|---|---|---|---|---|
| C-2383 | | 2009-06 | COCINA CGE6-41 | | 4 | Fagor Industrial S.Coop. Oñate FAGOR |

| MOD. | COCINAS /RANGES | ZONA | HORNO / OVEN | PLANO | C-2383 |
|---|---|---|---|---|---|

| ITEM | CODIGO | DENOMINACION | TEXTO | CGE6-41 | | | | | | | NOTAS |
|---|---|---|---|---|---|---|---|---|---|---|---|
| 1 | J022602000 | POSTERIOR CHIMENEA CG6-41 | REAR FLUEPIPE CG6-41 | 1 | | | | | | | |
| | Q419005000 | REMACHE 4X8 ALMG3 / ALUMINIO | RIVET 4X8 ALMG3 / ALUMINIUM | 4 | | | | | | | |
| 2 | J022608000 | SEPAR. CHIMENEA HORNO SNACK | SEPAR. OVEN FLUEPIPE SNACK | 1 | | | | | | | |
| | Q419005000 | REMACHE 4X8 ALMG3 / ALUMINIO | RIVET 4X8 ALMG3 / ALUMINIUM | 4 | | | | | | | |
| 3 | J022603000 | ANTERIOR CHIMENEA CG6-41 | FRONT FLUEPIPE CG6-41 | 1 | | | | | | | |
| | Q419005000 | REMACHE 4X8 ALMG3 / ALUMINIO | RIVET 4X8 ALMG3 / ALUMINIUM | 12 | | | | | | | |
| 4 | U055644000 | FIJACION BULBO | FASTENING BULB | 1 | | | | | | | |
| | Q412000000 | REMACHE TUBULAR 4x8 | TUBULAR RIVET 4x8 | 2 | | | | | | | |
| 5 | J045610000 | SUJECCION JUNTA PUERTA | DOOR SEAL FASTENING | 2 | | | | | | | |
| | Q012031000 | TORNILLO EXAGONAL M5x10 A304 | HEXAGONAL BOLT M5x10 A304 | 6 | | | | | | | |
| | Q302022000 | ARANDELA 16x6x1,2 A304 | WASHER 16x6x1.2 A304 | 6 | | | | | | | |
| 6 | J025610000 | JUNTA HORNO COMPL.SNACK | OVEN DOOR SEAL SNACK | 1 | | | | | | | |
| 7 | J045609000 | GUIA BANDEJAS HORNO SNACK | OVEN TRAY GUIDE SNACK | 2 | | | | | | | |
| 8 | J045613000 | PARRILLA DE HORNO SNACK | SNACK OVEN GRILLE | 1 | | | | | | | |
| 9 | J045608000 | SOLERA DE HORNO | OVEN FLOOR SNACK | 1 | | | | | | | ELIMINADA 02.11.2009 |
| 9 | J045614000 | SOLERA DE HORNO | OVEN FLOOR SNACK | 1 | | | | | | | INTRODUC. 02.11.2009 |
| 10 | J045612000 | EMBELLEC. GUIA BISAGRA SNACK | TRIM HINGE GUIDE SNACK | 4 | | | | | | | |
| | Q152045000 | TORNILLO AMARRE M6X25 | FASTENING BOLT M6X25 | 4 | | | | | | | |
| 11 | U010512000 | GUIA DE BISAGRA | HINGE GUIDE | 2 | | | | | | | ELIMINADA 12.12.11 |
| 11 | 12041846 | GUIA DE BISAGRA | HINGE GUIDE | 2 | | | | | | | INTRODUC. 12.12.11 |
| 12 | J042604000 | SOPORTE BISAGRA PUERTA | SUPPORT DOOR HINGE | 2 | | | | | | | |
| | Q221342000 | REMACHE EXAGONAL M5 | HEXAGONAL RIVET M5 | 4 | | | | | | | |
| | Q419005000 | REMACHE 4X8 ALMG3 / ALUMINIO | RIVET 4X8 ALMG3 / ALUMINIUM | 2 | | | | | | | |
| | Q012031000 | TORNILLO EXAGONAL M5X10 A304 | HEXAGONAL BOLT M5X10 A304 | 2 | | | | | | | |
| | Q302022000 | ARANDELA Ø16X6X1.2 A.304 | WASHER 16X6X1.2 A.304 | 5 | | | | | | | |
| | | | | | | | | | | | |
| | | | | | | | | | | | |
| | | | | | | | | | | | |
| | | | | | | | | | | | |
| | | | | | | | | | | | |
| | | | | | | | | | | | |

| MOD. | COCINAS /RANGES | ZONA | VARIOS / MISCELLANEOUS | PLANO | |
|---|---|---|---|---|---|

| ITEM | CODIGO | DENOMINACION | TEXTO | CGE6-41 | | | | | | | NOTAS |
|---|---|---|---|---|---|---|---|---|---|---|---|
| | J016501000 | FOLLETO DE INSTRUCCIÓNES | INSTRUCTION LEAFLE | 1 | | | | | | | |
| | U673054000 | ESQUEMA TEORICO ADH. CGE6-41 | THEO. DIAGRAM LABELCGE6-41 | 1 | | | | | | | HC-76539 |
| | J033007000 | PLANO DE MONTAJE CE6- | CE6- ASSEMBLY PLAN | 1 | | | | | | | HC-81209 |
| | U673009000 | CABLEADO BORNAS A CONMUT. | TERMINAL WIRING TO SWITCH | 1 | | | | | | | |
| | U803007000 | CABLEADO HORNO CE-741 | OVEN WIRING CE-741 | 1 | | | | | | | |

| MOD. | COCINAS /RANGES | ZONA | REPUESTOS RECOMENDADOS<br>RECOMMENDED SPARE PART | PLANO | |
|---|---|---|---|---|---|

| ITEM | CODIGO | DENOMINACION | TEXTO | CGE6-41 | | | | | | | NOTAS |
|---|---|---|---|---|---|---|---|---|---|---|---|
| 9 | U020528000 | BISAGRA CIERRE HORNO | OVEN LOCK HINGE | 2 | | | | | | | C-2380 |
| 4 | J015702000 | SUPERIOR QUEMADOR BSI | TOP BURNER BSI | 4 | | | | | | | C-2381 |
| S/Nº | J015710000 | BASE QUEMADOR C/TOBERA | BURNER BASE W/NOZZLE | 4 | | | | | | | C-2381 |
| S/Nº | J015708000 | INYECTOR G30/29 G-N | INJECTOR G30/29 G-N | 4 | | | | | | | C-2381 |
| S/Nº | J012104000 | TERMOPAR L=650 COCINA SNACK | THERMOCOUPLE L=650 COOKER | 4 | | | | | | | C-2381 |
| S/Nº | 12041540 | CONJ-SUPERIOR-QUEMADOR-BSI | BURNER SET-TOP-BSI | 4 | | | | | | | C-2381 |
| 8 | 12043897 | PIEZOELECTRICO COMPLETO | COMPLETE PIEZOELECTRIC | 4 | | | | | | | C-2381 |
| S/Nº | 12043907 | ANILLO ADAPTADOR | ADAPTER RING | 4 | | | | | | | C-2381 |
| S/Nº | U323007000 | CABLE ENCENDEDOR BUJIA | LIGHTER SPARK PLUG CABLE | 2 | | | | | | | C-2381 |
| 1 | X153000000 | TERMOSTATO 50-310 C | THERMOSTAT 50-310 C | 1 | | | | | | | C-2382 |
| 2 | U673006000 | CONMUTADOR | SWITCH | 1 | | | | | | | C-2382 |
| 3 | 12047390 | PILOTO VERDE 230V AC 8KW 16MM | GREEN PILOT 230V AC 8KW 16M | 1 | | | | | | | C-2382 |
| 4 | 12024669 | PILOTO AMBAR Ø18 | AMBER PILOT Ø18 | 1 | | | | | | | C-2382 |
| 7 | J043002000 | RESISTENCIA 1000W-230V SNACK | RESISTOR 1000W-230V SNACK | 6 | | | | | | | C-2382 |
| 6 | J025610000 | JUNTA HORNO COMPL.SNACK | OVEN DOOR SEAL SNACK | 1 | | | | | | | C-2383 |
| 11 | 12041846 | GUIA DE BISAGRA | HINGE GUIDE | 2 | | | | | | | C-2383 |
| | | | | | | | | | | | |
| | | | | | | | | | | | |
| | | | | | | | | | | | |
| | | | | | | | | | | | |
| | | | | | | | | | | | |
| | | | | | | | | | | | |
| | | | | | | | | | | | |
| | | | | | | | | | | | |
| | | | | | | | | | | | |
| | | | | | | | | | | | |
| | | | | | | | | | | | |
| | | | | | | | | | | | |
| | | | | | | | | | | | |
| | | | | | | | | | | | |

# HE9-10

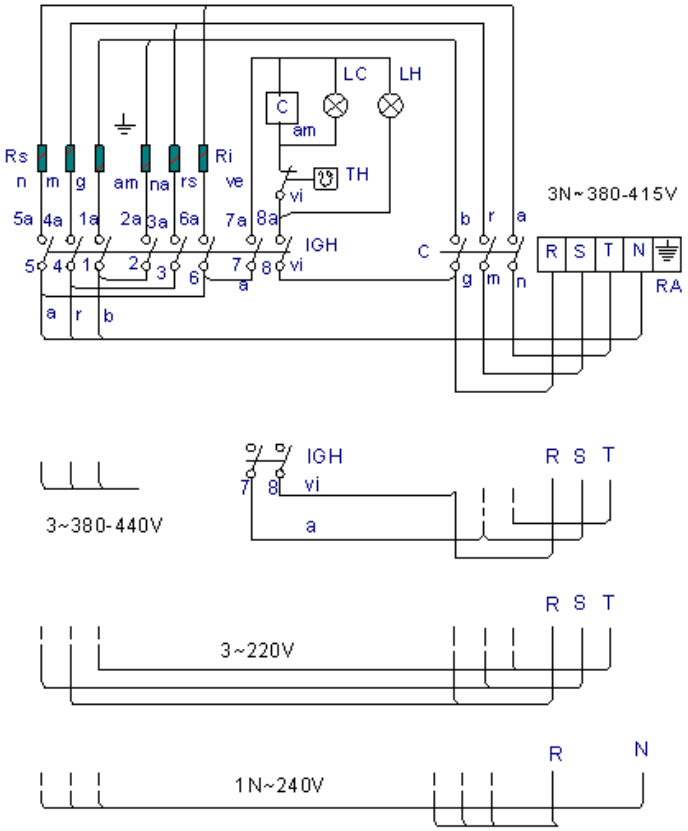


RA: Regleta de Alimentacion

IGH :Conmutador General Horno

C: Contactor

LC : Lampara Calentamiento Horno

LH: Lampara Horno Encendido

TH : Termostato de Horno

Rs : Resistencia Horno Superior

Ri : Resistencia Horno Inferior

r = rojo-red-rouge
m = marron-brown-marron
g = gris-grey-gris
n = negro-black-noir
a = azul-blue-bleu
b = blanco-white-blanc
vi = violeta-violette-violet
am = amarillo-yellow-jaune
na = naranja-orange-orange
rs = rosa-rose-pink
ve = verde-green-vert
am/ve = amarillo/verde-yellow/green-jaune/vert

| | 1_2 1a 2a | 3_4 3a 4a | 5_6 5a 6a | 7 7a | 8 8a |
|---|---|---|---|---|---|
| 0 | | | | | |
| 1 | X | X | X | X | X |
| 2 | X | X | X | X | X |
| 3 | | X | X | X | X |

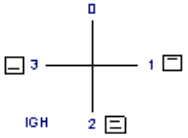


**U673054**

| | | | | | | |
|---|---|---|---|---|---|---|
| | Esquema teorico adhesivo | | | U-673054000 | | |
| N° | Pieza | Cant. | Material | Nº Clasificacion | Acabado | |
| N° | Modificacion | | Propiesta de | Fecha | Tolerancias generales | |
| | | | | | <5± : 50-100± : | |
| | | | | | 5-25± : >100± | |
| | | | | | 25-50± : ○x± | |
| | | Firma | Fecha | | Mecanizado superficial | |
| | Dibujado | M.mallib | 01-11-2002 | FAGOR | | |
| | Proyectado | | | | | |
| | Comprobado | | | Fagor Industrial,Koop.Elk, Mogatxa | | |
| | Escala 1/1 | COCINAS HE9-10 | | | Plano número HC-76539 | |
| | | Plano hauzez falleterailez kendagun laimendigale | | | Sustituye al Nº | |
| | | | | | Sustituido por | |

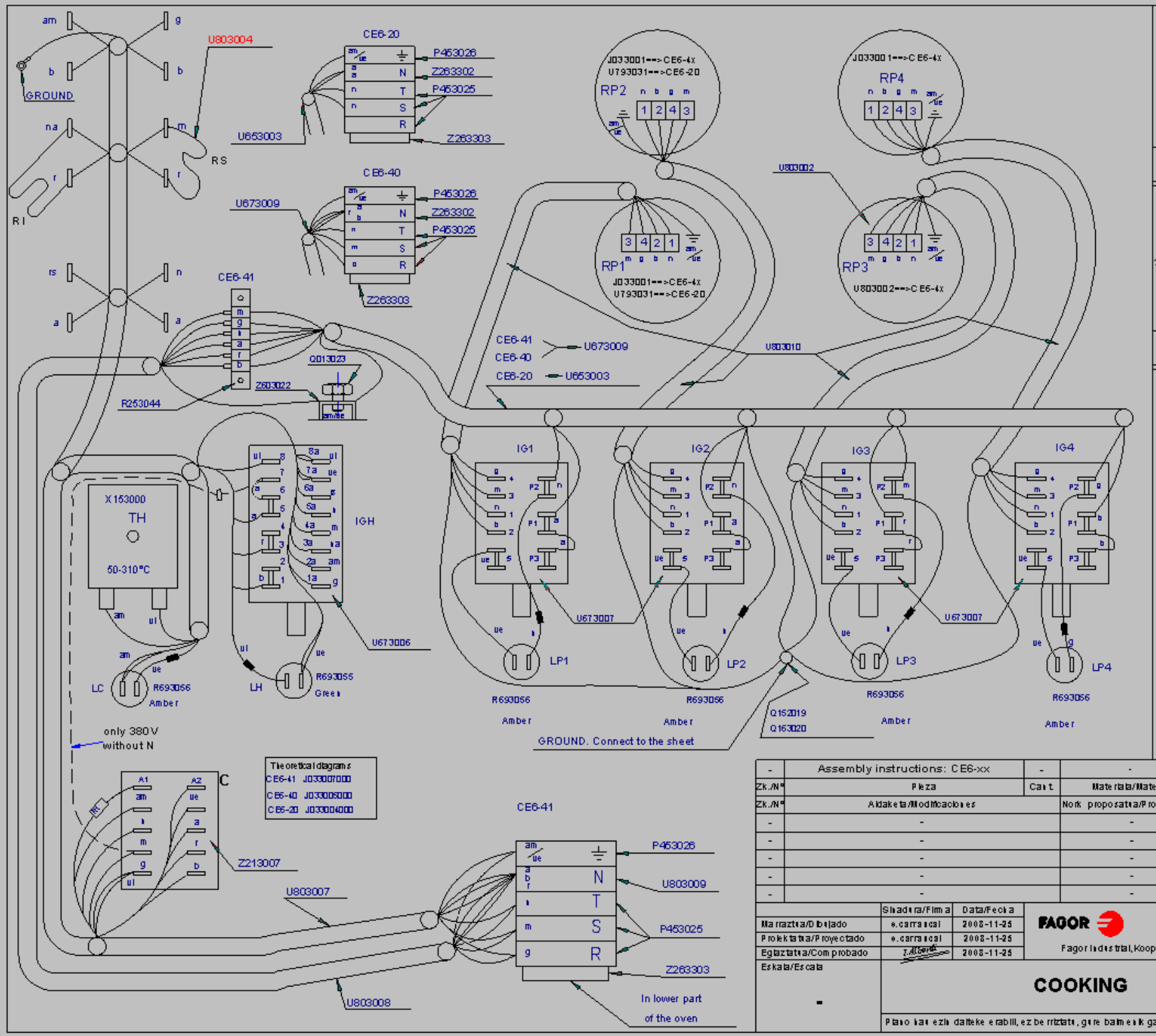


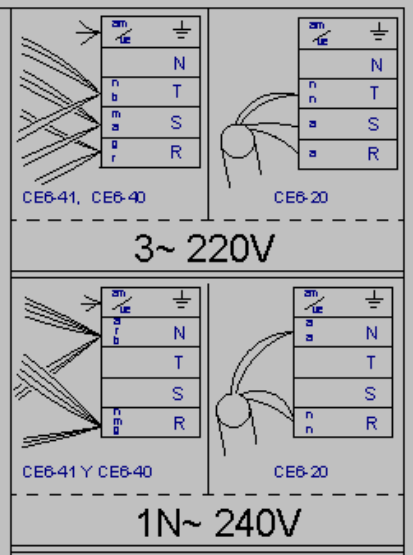


3 ~ 380-440V WITHOUT N

RP1, RP2, RP4 = U803070

RP3, -------- = U803071

U803072= R:150KOhm1/4W

R1 U803073 = R:8K2Ohm6W

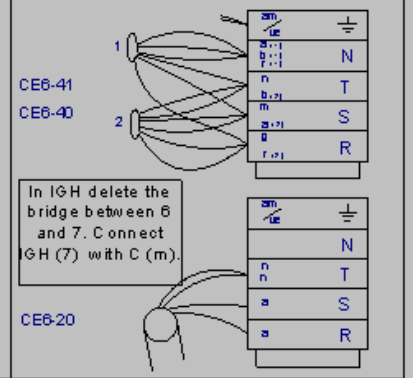


In IGH delete the bridge between 6 and 7. Connect IGH (7) with C (m).

| | | | | | |
|---|---|---|---|---|---|
| - | Assembly instructions: CE6-xx | - | - | J033007000 | - |
| Zk./Nº | Pieza | Cant. | Materiala/Material | Klas. zk/Nº Clas. | Gainazal akabera/Tratamiento |
| Zk./Nº | Aldaketa/Modificaciones | | Nork proposatua/Propuestade | Data/Fecha | Perdol orokorrak Tolerancias generales |
| - | - | | - | - | |
| - | - | | - | - | < 5 ± 0.2 / 50 ÷ 100 ± 0.8 |
| - | - | | - | - | 5 ÷ 25 ± 0.4 / >100± 1 |
| - | - | | - | - | 25 ÷ 50 ± 0.6 / α ± 1 |
| - | - | | - | - | |

| | Sinadura/Firma | Data/Fecha |
|---|---|---|
| Marraztua/Dibujado | e.carrancal | 2008-11-25 |
| Proiektatua/Proyectado | e.carrancal | 2008-11-25 |
| Egiaztatua/Comprobado | [signature] | 2008-11-25 |

FAGOR

Fagor Industrial, Koop. Elk., Mugatua

Gainazal perdola
Mecanizado superficial

—

Eskala/Escala

-

# COOKING

Plano Zk./Plano Nº
HC-81209

- Zk. ord. du
- Zk. gaitik ord.

Plano hau ezin daiteke erabili, ez berriztatu, gure baimenik gabe.