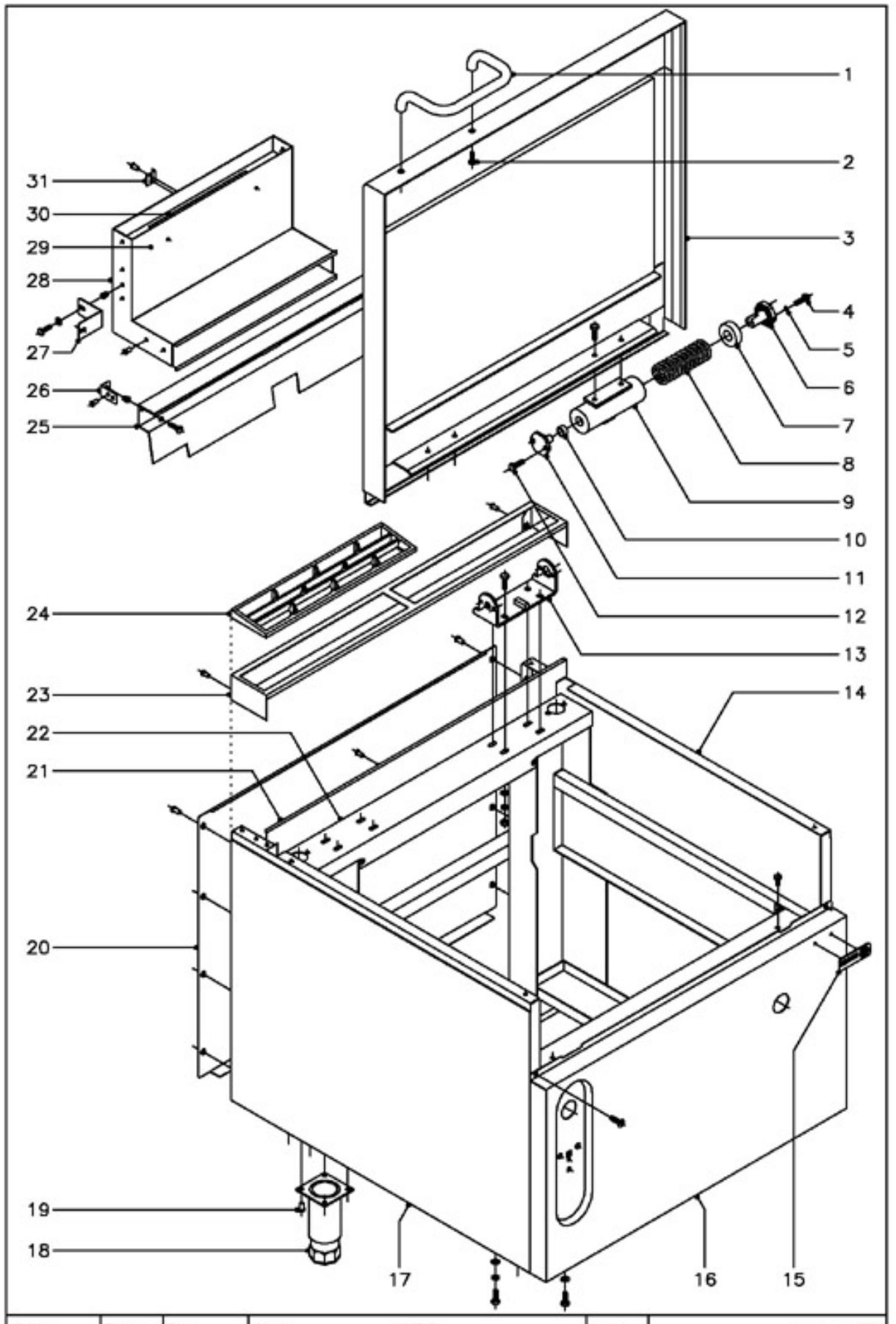

1	S036123
2	X152809
3	X152843
3	X282820
4	Q012042
5	Q262040
6	S116120
7	S116118
8	S116121
9	X156101
	Q012051
10	S116126
11	S116119
12	Q012041
13	X286102
	Q012053
	Q232050
	Q262050
	Q162050
14	X152836
14	X242820
	Q012042
	Q262040
	Q302022
15	U262806
	Q221023
16	X152839
16	X342805
16	X142802
16	X142802
16	X282816
16	X422801
	Q012042
	Q262040
	Q152004
17	X152835
17	X242821
	Q012042
	Q262040
	Q302022
18	X260151
19	Q411304
20	U562853
20	S372816
20	U582852
20	X412802
	Q419005

21	X152638
21	X282613
	Q419005
22	X150100
22	X240100
22	X420100
22	X440100
23	R205428
23	R205430
	Q419005
25	X152677
25	X282630
	Q012031
	Q232030
	Q221342
26	X152679
	Q419005
27	X152655
	Q012031
	Q302022
	Q221342
28	X152674
28	X282627
29	X152673
29	X282626
30	X152654
30	X282628
31	R202607
	Q419005

N plano	Firma	Fecha	Aparato	Lamina
C-1197		6-2002	MUEBLE SARTEN BASCULANTE 900	1

Fagor Industrial S.Coop. FAGOR
Otate

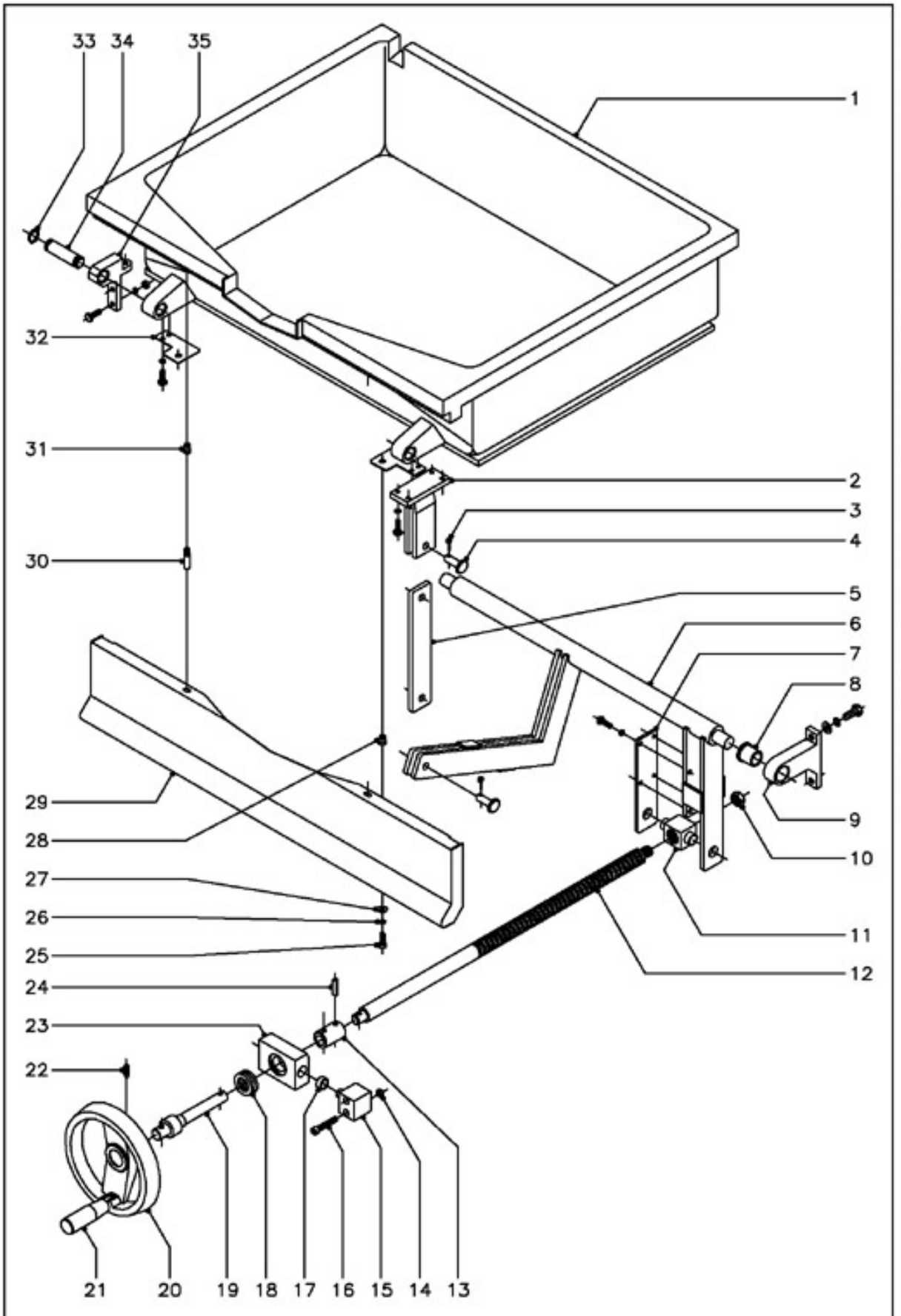

1	X156155
1	X156150
1	X146125
1	X146126
2	X156157
	Q262040
	Q012042
2	-
3	Q352024
4	X156123
5	X156151
6	X156148
7	X156149
	Q012042
	Q262040
8	X109550
9	X150108
	Q232060
	Q261060
	Q012063
10	Q222015
11	X156154
12	X156152
13	X156115
14	Q162040
15	X156113
16	Q052046
17	S116126
18	X156125

19	X156153
20	X156139
21	X156135
22	Q131552
23	X156114
24	Q371027
25	Q012042
26	Q262040
27	Q302022
28	Q221343
29	X152830
29	X152833
30	Q151336
31	Q221343
32	X156156
	Q262040
	Q012042
33	Q301020
34	X109511
35	X156145
	Q012043
	Q262040
	Q162040

N plano	Firma	Fecha	Aparato	Lamina	
C-1198		6-2002	CUBA SARTEN BASCULANTE 900 (Elev.Manual)	2	Fagor Industrial S.Coop. FAGOR Oñate

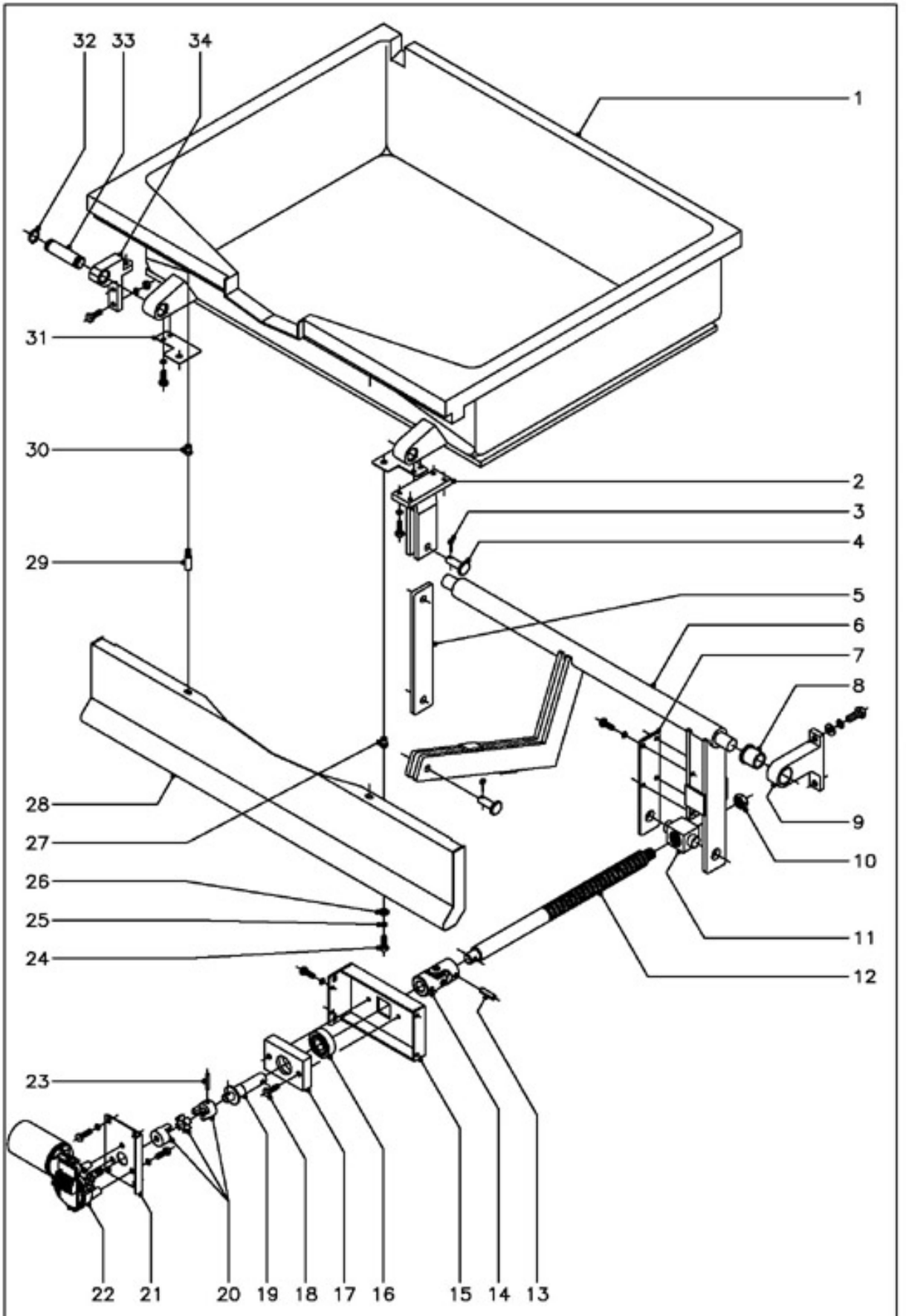

1	X156155
1	X156150
1	X146125
1	X146126
1	X286105
1	X426102
2	X156157
	Q262040
	Q012042
2	-
3	Q352024
4	X156123
5	X156151
6	X156148
6	X286106
6	X426103
7	X156149
	Q012042
	Q262040
8	X109550
9	X150108
	Q232060
	Q261060
	Q012063
10	Q222015
11	X156154
12	X156152
13	Q371027
14	X126114

15	X342607
	Q012032
	Q262030
16	X346109
17	X346105
18	Q012044
19	X346106
20	X346107
21	X342603
	Q012042
	Q262040
22	X343020
	Q012042
	Q262040
23	Q371032
24	Q012042
25	Q262040
26	Q302022
27	Q221343
28	X152830
28	X152833
28	X282815
29	Q151336
30	Q221343
31	X156156
	Q262040
	Q012042
32	Q301020
33	X109511
34	X156145
	Q012043
	Q262040
	Q162040

N plano	Firma	Fecha	Aparato	Lamina	
C-1199		6-2002	CUBA SARTEN BASCULANTE 900 (Elev.Motor)	3	Fagor Industrial S.Coop. FAGOR Onate

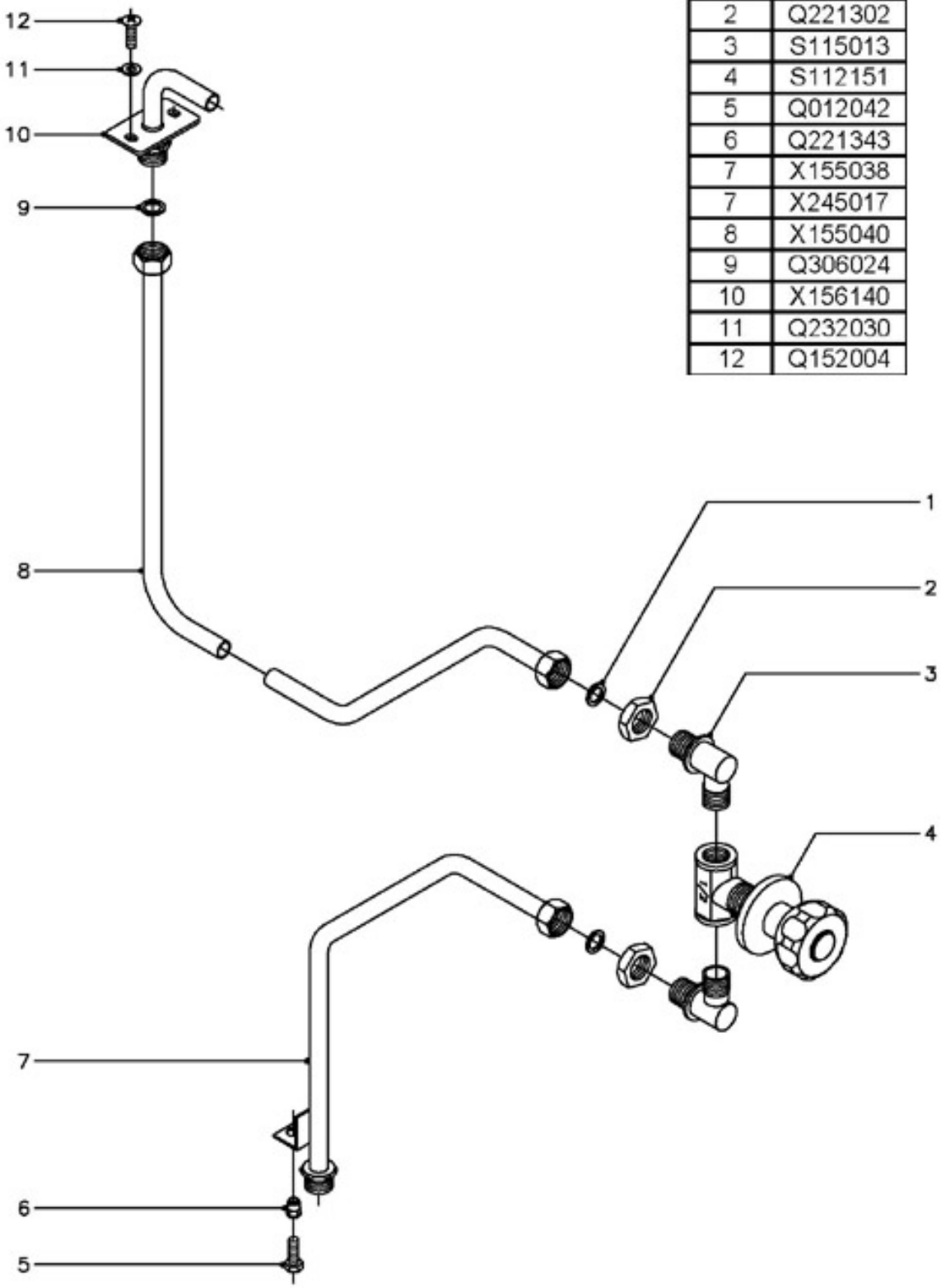

1	Q306024
2	Q221302
3	S115013
4	S112151
5	Q012042
6	Q221343
7	X155038
7	X245017
8	X155040
9	Q306024
10	X156140
11	Q232030
12	Q152004

N plano	Firma	Fecha	Aparato	Lamina	
C-1200		6-2002	TOMA DE AGUA SARTEN BASCULANTE 900	4	Fagor Industrial S.Coop. FAGOR Onate

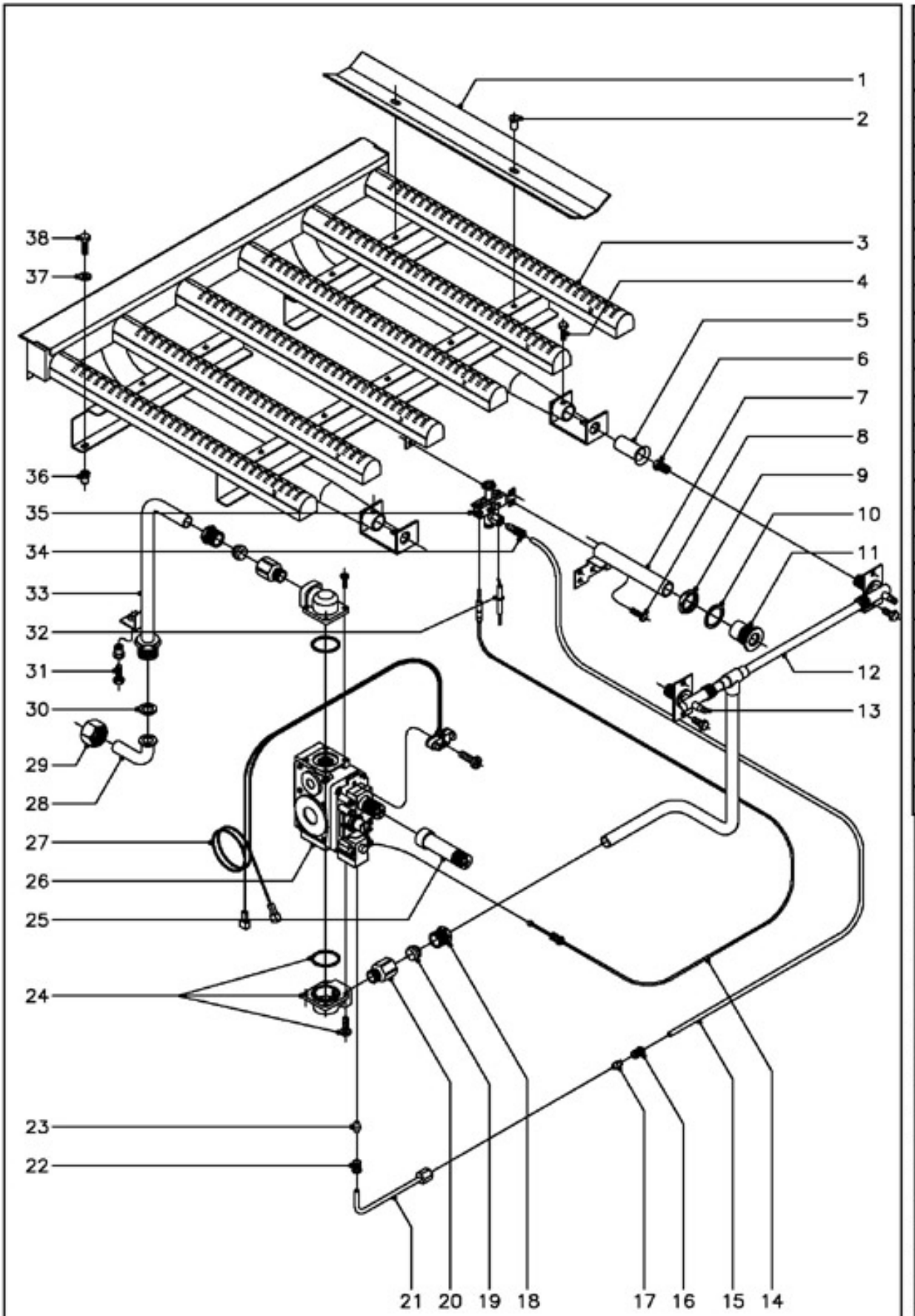

1	X155720
1	X155721
2	Q419005
3	X155710
3	X285710
4	Q012031
5	U325707
6	U052401
6	U262400
6	X102403
7	X155035
8	Q012031
9	Q221324
10	Q306027
11	S112804
12	X155030
12	X285015
	Q012031
13	Q153002
14	U562130
15	X155032
15	X285017
16	U195009
17	X205028
18	X012104
19	X012105
20	X162101
21	X155043
22	U195009
23	X205028
24	X153004
25	X262100
26	X163000
	X163020
27	R275027
28	U565007
29	U725006
30	Q306052
31	Q012042
	Q221343
32	X012101
33	X155033
34	U134323
35	U322118
36	Q221342
37	Q302022
38	Q012031

N plano	Firma	Fecha	Aparato	Lamina	
C-1201		6-2002	PARTE FUNCIONAL GAS SARTEN BASCULANTE 900	5	Fagor Industrial S.Coop. Oñate

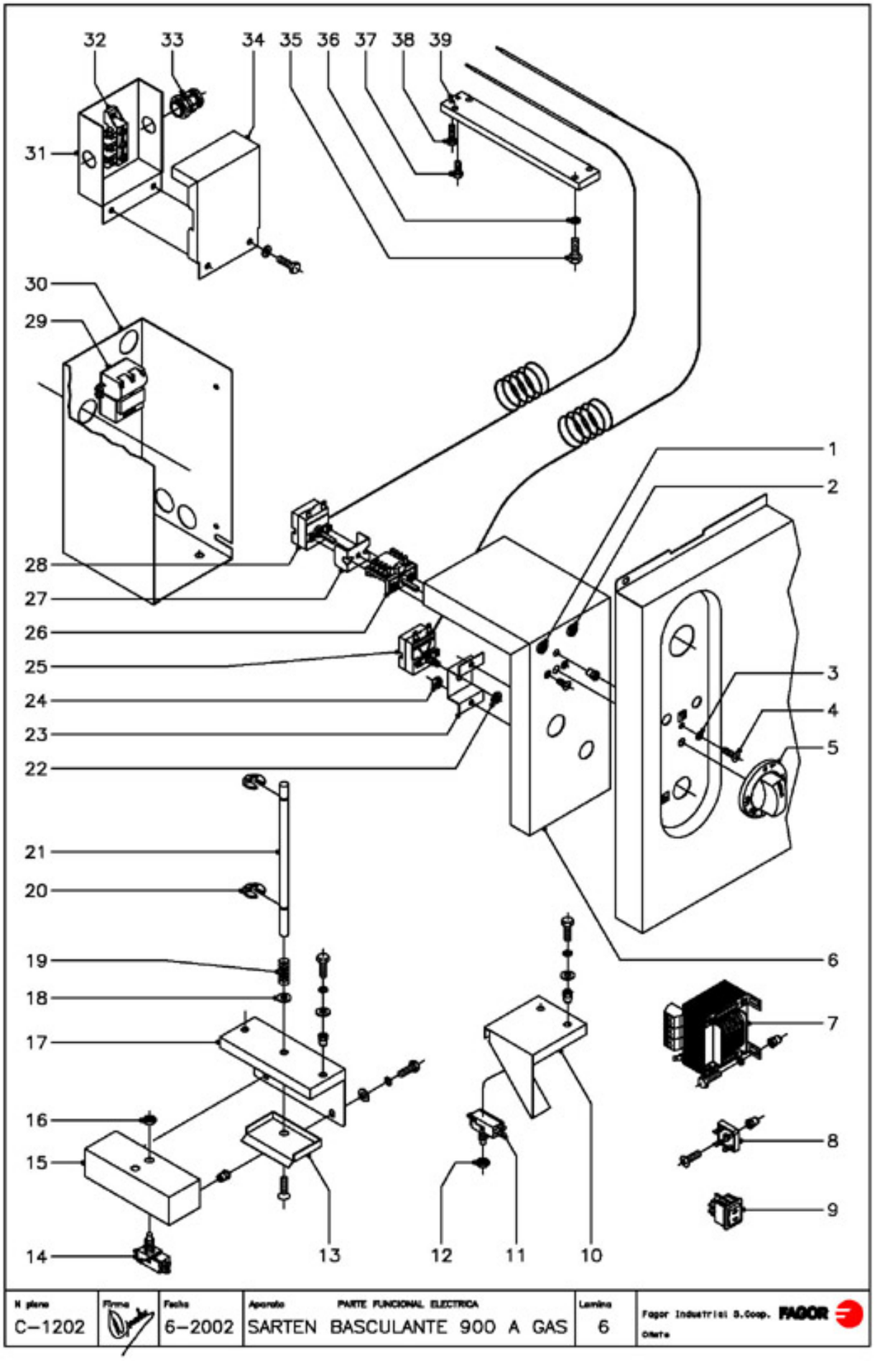

1	X143017
2	X143018
3	Q262030
4	Q152004
	Q221342
5	X152111
	Q281000
6	X152667
7	X343021
	Q012031
	Q302022
	Q221342
	X342605
	X342606
	Q012031
	Q302022
	X342609
	Q419005
8	X343022
	Q152004
	Q221342
9	X343009
	X342608
	Q012042
	Q162040
	Q302022
10	X342602
	Q012031
	Q262030

	Q302022
	Q221342
11	X343015
12	Q222005
13	X152646
	Q152024
14	X343015
15	X152681
	Q221342
	Q302022
	Q262030
	Q012031
16	Q222005
17	X152680
	Q221342
	Q302022
	Q262030
	Q012031
18	Q232050
19	Z700603
20	Q271033
21	X152682
22	Q223022
23	X152661
24	Q162030
25	R612103
26	X163007
	Q151320
27	X313001
28	X153000
29	R073007
30	X152656
31	X342601
32	U183046
33	R073004
34	X342600
	Q302022
	Q012042
35	Q012042
36	Q262040
37	Q012032
38	Q012033
39	X156147

N plano	Firma	Fecha	Aparato	Lamina	
C-1202		6-2002	PARTE FUNCIONAL ELECTRICA SARTEN BASCULANTE 900 A GAS	6	Fagor Industrial S.Coop. FAGOR Oñate

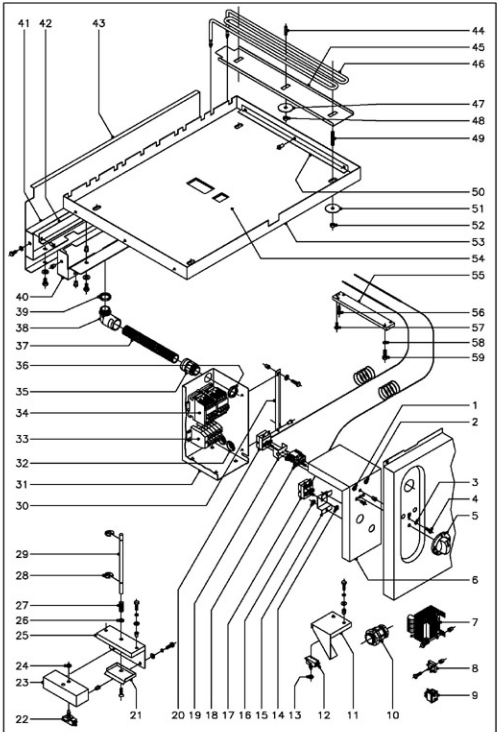

N plano	Firma	Fecha	Aparato	PARTE FUNCIONAL ELECTRICA	Lamina
C–1203		6–2002	SARTEN BASCULANTE 900 ELECTRICA		7

Fagor Industrial S.Coop. FAGOR
Oñate

		BUTANO-PROPANO
6	U052401	Tobera quemador Ø1,45
35	U442138	Inyector piloto Ø0,25
		GAS NATURAL
6	U262400	Tobera quemador Ø2,15
35	U442137	Inyector piloto Ø0,40
		GAS VILLA
6	X102403	Tobera quemador Ø4,58
35	U442138	Inyector piloto Ø0,25

1	X143017
2	X143018
3	Q262030
4	Q152004
	Q221342
5	U673017
	Q281000
6	X152667
7	X343021
	Q012031
	Q302022
	Q221342
	X342605
	X342606
	Q012031
	Q302022
	X342609
	Q419005
8	X343022
	Q152004
	Q221342
9	X343009
	X342608
	Q012042
	Q162040
	Q302022
10	R033002
11	X342602
	Q012031
	Q282030
	Q302022
	Q221342
12	X343015
13	Q222005
14	Q223022
15	X152661
16	Q162030
17	R612103
18	X163007
	Q151320
19	X313001
20	X153000
21	X152646
	Q152024
22	X343015
23	X152681
	Q221342
	Q302022
	Q262030
	Q012031
24	Q222005
25	X152680
	Q221342
	Q302022
	Q262030
	Q012031
26	Q232050
27	Z700603
28	Q271033
29	X152682

30	X152657
	Q221342
	Q302022
	Q012031
31	X152656
	Q419005
32	X723014
33	P453025
	Z263302
	P453026
	Z263303
33	Z683069
	Z683097
	Z683070
	Z683096
	Z403016
	Q419005
34	R663031
34	X183011
	Z403016
	Q419005
35	X713021
36	X713022
37	3712300
38	Z703006
39	X143012
40	X142651
40	X422616
	Q221342
	Q302022
	Q012032
41	X142652
41	X422617
	Q221342
	Q302022
	Q012032
42	X402601
	Q419005
43	X142653
43	X422618
	Q221342
	Q302022
	Q012032
44	Q131555
45	X142620
46	X143010
47	Q302024
48	Q162050
49	Q131558
50	X142609
	Q419005
51	Q302024
52	Q162050
53	X142650
53	X422615
54	X142656
54	X422605
55	X156147
56	Q012033
57	Q012032
58	Q262040
59	Q012042