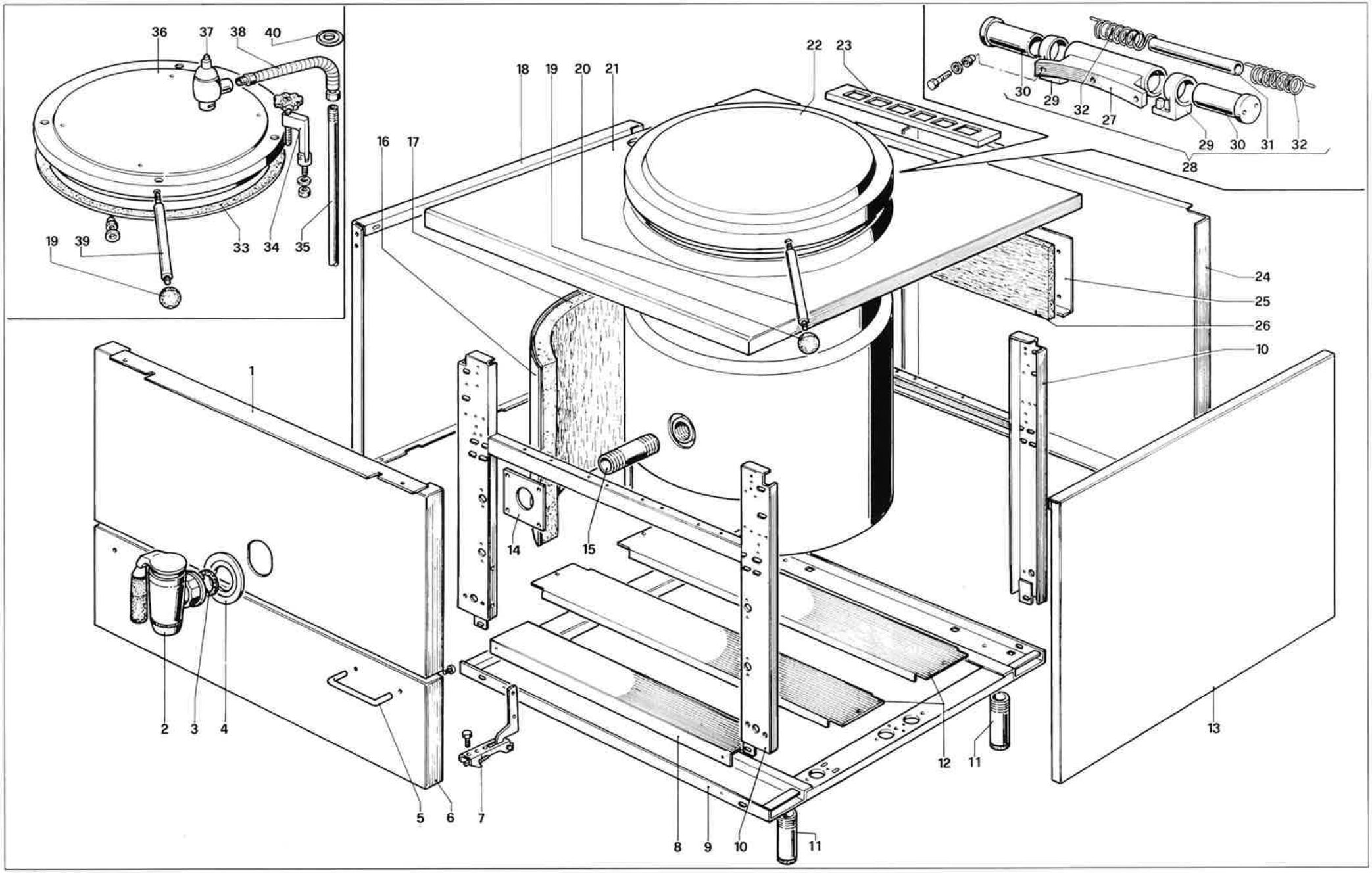

MBM

CLASSICA

TAV. 952

TAV. 952 STRUTTURA PENTOLA GAS — STRUCTURE MARMITTE À GAZ — *GAS BOILING PAN STRUCTURE*

	Codice	Denominazione	Denomination	*Denomination*	CP100	CP150	CP100A	CP150A
1	GACP900048	**Facciata superiore**	Devanture supérieur	*Superior face*	●		●	
1	GACP900049	**Facciata superiore**	Devanture supérieur	*Superior face*		●		●
2	RTCP900004	**Rubinetto di scarico 2''**	Robinet de decharge 2''	*Discharge tap 2''*	●	●	●	●
3	RTCP900025	**Guarnizione**	Guarniture	*Gasket*	●	●	●	●
4	RTCP900018	**Borchia 2''**	Clou 2''	*Boss 2''*	●	●	●	●
5	RTBF800020	**Maniglia porta**	Poignée porte	*Door handle*	●	●	●	●
6	GACP900059	**Porta inferiore**	Porte inférieur	*Lower door*	●		●	
6	GACP900060	**Porta inferiore**	Porte inférieur	*Lower door*		●		●
7	RTCP900047	**Cerniera porta inferiore**	Charniere porte inférieur	*Door hinge*	●	●	●	●
8	PACP900003	**Protezione basamento**	Protection du soubassement	*Base protection*	●	●	●	●
9	GACU900153	**Basamento**	Soubassement	*Base*	●	●	●	●
10	GACU900051	**Facciata**	Devanture	*Face*	●	●	●	●
11	RTCU900077	**Piedino**	Pied	*Foot*	●	●	●	●
12	PACP900002	**Traversa sostegno camera combust.**	Croisillon porte chambre de combustion	*Cross-bar for combustion chamber*	●	●	●	●
13	PACU900146	**Fianco destro**	Côté droite	*Right side*	●	●	●	●
14	PACP900147	**Protezione bruciatore**	Protection du brûleur	*Burner protection*	●	●	●	●
15	RTCP900017	**Niples 2''**	Niples 2''	*Niples 2''*	●	●	●	●
16	PACP900007	**Coprilana destro e sinistro**	Panneau couvre isolant	*Cover insulating panel*	●		●	
16	PACP900064	**Coprilana destro e sinistro**	Panneau couvre isolant	*Cover insulating panel*		●		●
17	MPLAN40N00	**Isolante lana s/clima**	Laine s/clima	*S/clima wool*	●	●	●	●
18	PACU900147	**Fianco sinistro**	Côté gauche	*Left side*	●	●	●	●
19	RTCP900013	**Pomolo maniglia**	Pommette	*Knob*	●	●	●	●
20	RTCP900011	**Maniglia coperchio**	Poignée couvercle	*Cover handle*	●	●	●	●
21	GACP900010	**Pentola CP100**	Récipient CP100	*Bowl CP100*	●		●	
21	GACP900011	**Pentola CP150**	Récipient CP150	*Bowl CP150*		●		●
22	RTCP900009	**Coperchio**	Couvercle	*Cover*	●	●	●	●
23	PACP900106	**Griglia camino**	Grille cheminée	*Chimney grate*	●	●	●	●
24	PACP900001	**Posteriore inox**	Panneau postérieur	*Back panel*	●	●	●	●
25	PACP800079	**Fermalana camino interno**	Arrêt panneau isolant	*Lock for insulating panel*	●	●	●	●
26	MPLAN40N01	**Isolante lana s/clima**	Laine s/clima	S/clima wool	●	●	●	●
27	RTCP900054	**Corpo cerniera**	Charnière	*Hinge*	●	●		
28	RTCP900008	**Cerniera coperchio completa**	Charniere couvercle compl.	*Cover hinge*	●	●		
29	RTCP900053	**Supporto cerniera**	Support charnière	*Hinge support*	●	●		
30	RTCP900052	**Regolatore cerniera**	Regulator charnière	*Hinge regulator*	●	●		
31	RTCP900055	**Perno coperchio**	Guide ressor charnière	*Guide for hinge spring*	●	●		
32	RTCP900056	**Molla destra e sinistra cerniera**	Ressorts couvercle	*Spring for hinge*	●	●		
33	RTCP900086	**Guarnizione coperchio autoclave**	Guarniture couvercle autoclave	*Pressurised cover gasket*			●	●
34	RTCP900015	**Tirante coperchio**	Barre de jointure de couvercle	*Cover stay rod*			●	●
35	PACP900009	**Tubo scarico vapore**	Tube pour le décharge de la vapeur	*Discarge vapour pipe*			●	●
36	RTCP900010	**Coperchio autoclave**	Couvercle autoclave	*Autoclave cover*			●	●
37	RTCP900014	**Valvola coperchio autoclave**	Soupape couvercle autoclave	*Autoclave cover valve*			●	●
38	RTCP900016	**Tubo flessibile scarico vapore**	Tube flex. pour le décharge de la vapeur	*Discarge vapour flexible pipe*			●	●
39	RTCP900012	**Maniglia coperchio**	Poignée couvercle	*Cover handle*			●	●
40	RTCP900048	**Borchia 1/2'' tubo scarico**	Clou	*Boss*			●	●

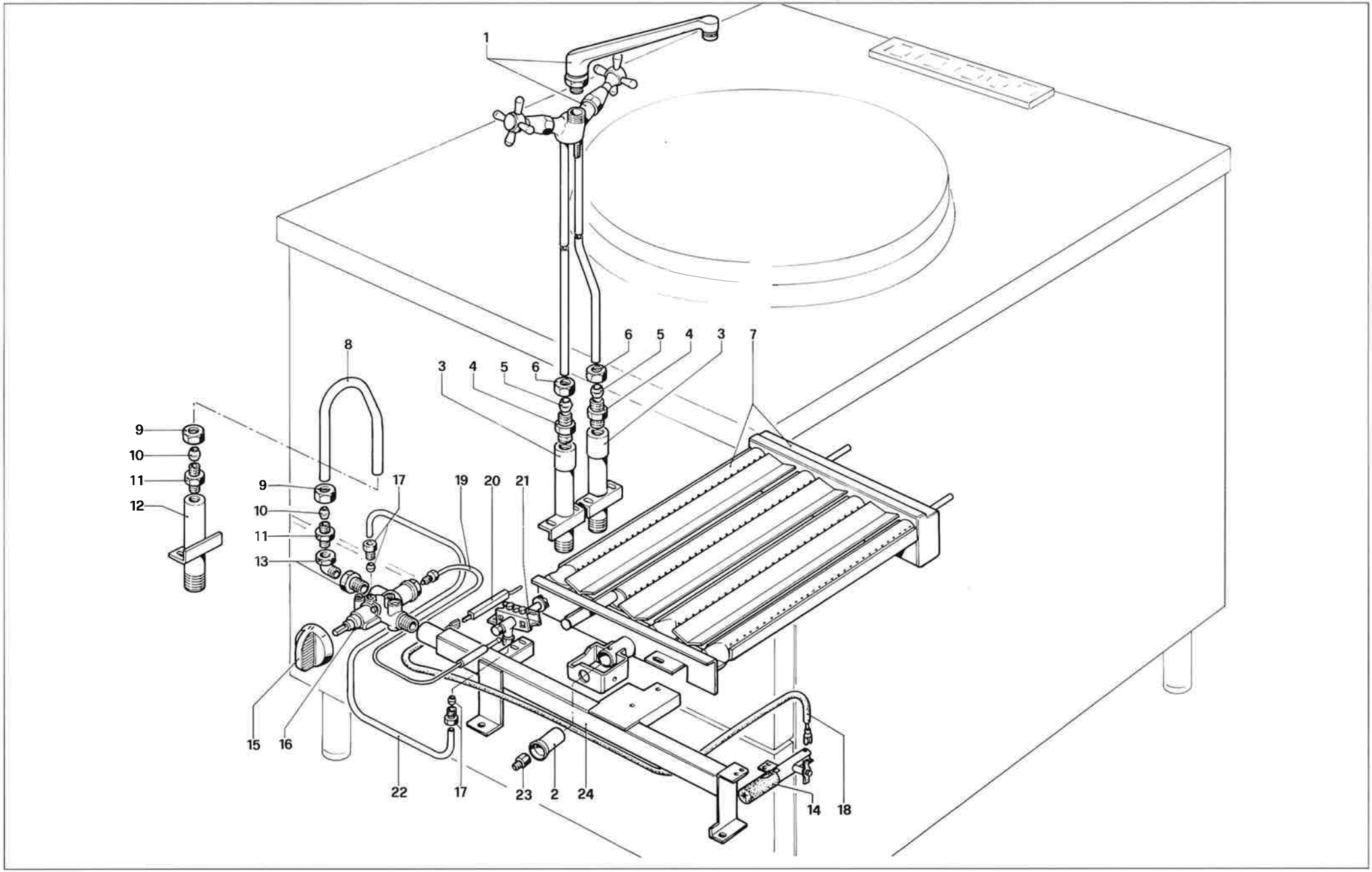

MBM

CLASSICA

TAV. 954

TAV. 954 IMPIANTO GAS PENTOLA EQUIPEMENTS POUR GAZ MARMITE *BOIL. PAN GAS SYST. EQUIP.*

	Codice	Denominazione	Denomination	*Denomination*	CP100	CP150	CPI100	CPI150
1	RTCP900005	**Rubinetto acqua**	Robinet de l'eau	*Water tap*	●	●	●	●
2	RTCP900065	**Regolatore aria**	Disposit. de reglage d'admiss. d'air brûl.	*Air regulator burner*	●	●	●	
3	GACP900023	**Attacco acqua**	Attaque de l'eau	*Water connection*	●	●	●	●
4	RTCU900132	**Niples 1/2'' - 3/8''**	Niples 1/2'' - 3/8''	*Niples 1/2'' - 3/8''*	●	●	●	●
5	RTCU900012	**Bicono per tubo ∅ 10**	Bicone pour tube ∅ 10	*Bicone for tube ∅ 10*	●	●	●	●
6	RTCU900013	**Raccordo per tubo ∅ 10**	Écrou pour tube ∅ 10	*Nut for tube ∅ 10*	●	●	●	●
7	GACP900032	**Bruciatore**	Brûleur	*Burner*	●	●	●	●
8	PACP900004	**Tubo alimentazione rubinetto**	Tube d'alimentation robinet	*Tap feeding pipe*	●	●	●	●
9	RTCP900089	**Calotta per tubo ∅ 14**	Écrou pour tube ∅ 14	*Nut for tube ∅ 14*	●	●	●	●
10	RTCP900088	**Bicono per tubo ∅ 14**	Bicone pour tube ∅ 14	*Bicone for tube ∅ 14*	●	●	●	●
11	RTCP900087	**Niples 1/2'' x M20**	Niples 1/2'' x M20	*Niples 1/2'' x M20*	●	●	●	●
12	GACP900024	**Attacco gas**	Attaque du gaz	*Gas connection*	●	●	●	●
13	RTCP900066	**Gomito completo**	Raccord 90°	*Fitting 90°*	●	●	●	●
14	RTCU900056	**Accenditore piezo**	Allumage piezo	*Piezo lighting*	●	●	●	●
15	RTCP900026	**Manopola rubinetto**	Bouton pour robinet	*Tap knob*	●	●	●	●
16	RTCP900003	**Rubinetto gas valvolato**	Soupape de sûreté	*Safety tap*	●	●	●	●
17	RTCU700141	**Bicono + raccordo ∅ 4**	Bicone + écrou ∅ 4	*Bicone + nut ∅ 4*	●	●	●	●
18	RTCP900051	**Cavo accensione**	Cable d'allumage	*Lighting cable*	●	●	●	●
19	RTCU700148	**Termocoppia cm. 50**	Thermocouple cm. 50	*Thermocouple cm. 50*	●	●	●	●
20	RTCU900073	**Candela quadra**	Électrode bugie carré	*Square spark plug*	●	●	●	●
21	RTCU900074	**Pilota 3 vie**	3 voies veilleuse	*3 ways pilot*	●	●	●	●
22	PACP900006	**Tubo pilota bruciatore**	Tube veilleuse	*Pilot pipe*	●	●	●	●
23	RTBF900017	**Iniettore ∅ 2.20 K per GPL**	Injecteur ∅ 2.20 K pour GPL	*LPG injector ∅ 2.20 K*	●	●	●	●
23	RTCP900067	**Iniettore ∅ 3.25 K gas metano**	Injecteur ∅ 3.25 K gaz méthane	*Methane injector ∅ 3.25 K*	●	●	●	●
24	GACP900012	**Rampa di alimentazione**	Collecteur de alimentation	*Collector*	●		●	
24	GACP900013	**Rampa di alimentazione**	Collector de alimentation	*Collector*		●		●