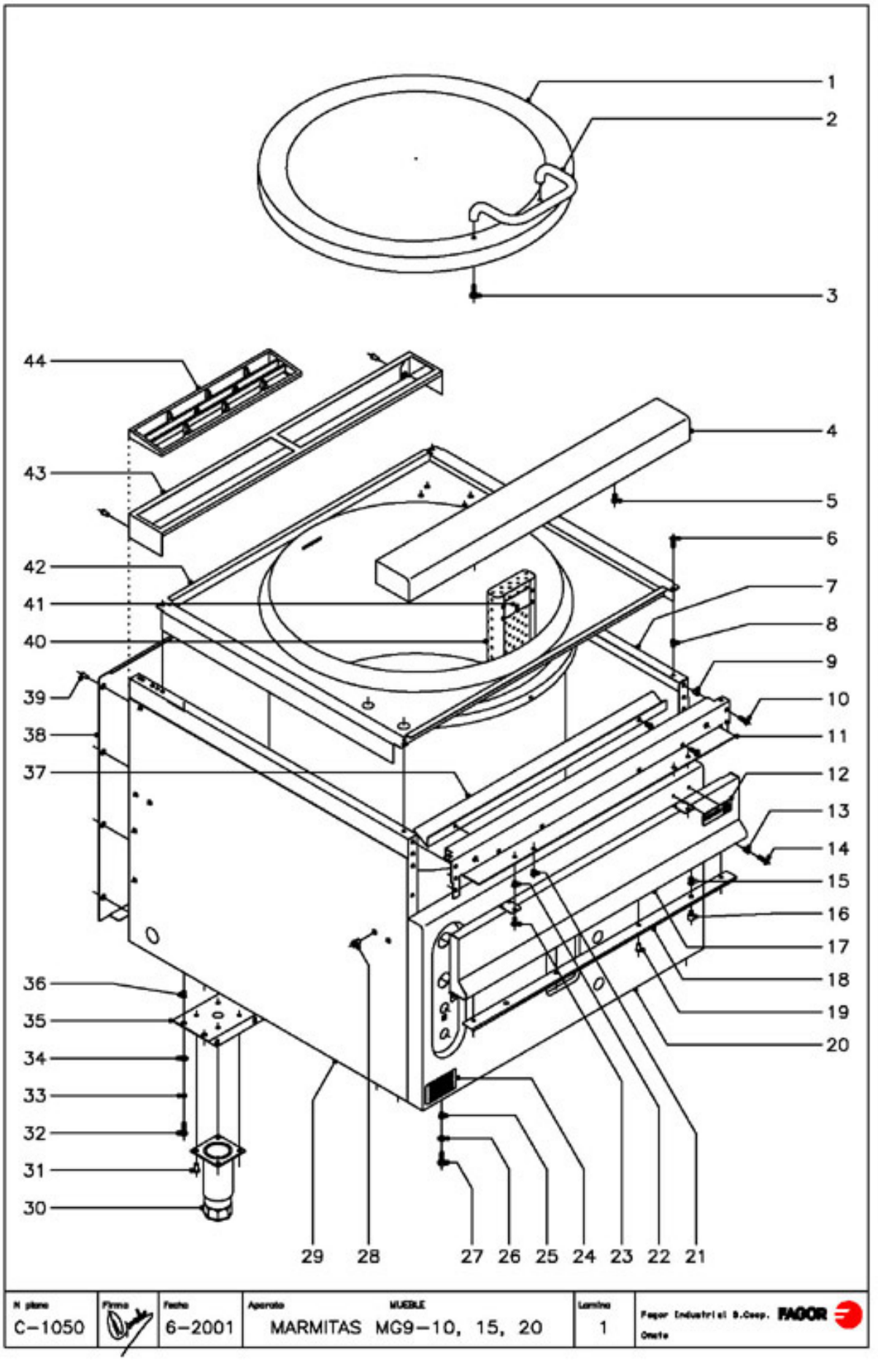

1	S036141
2	S036123
3	Q012053
4	R165431
5	Q152004
6	Q152004
7	X162811
7	X192805
7	S372812
8	Q221342
9	Q221342
10	Q152004
11	R162613
12	U262806
	Q221023
13	Q221342
14	Q152004
15	Q221343
16	Q151336
17	S032806
18	S032807
19	Q419005
20	S012802
20	S062810
20	S032802
20	S272801
21	Q221342
22	Q221342
23	Q152004
24	S326540
25	Q221343
26	Q302022
27	Q012042
28	Q221343
29	X162810
29	X192803
29	S372810
30	X260150
31	Q411304
32	Q012042
33	Q162040
34	Q302022
35	S032631

36	Q221343
37	S032645
	Q221342
	Q152004
38	U562853
38	X242817
38	S372816
39	Q419005
40	S016145
40	S036145
41	S036117
	Q412000
42	S016150
42	S036150
42	S276150
43	R205428
	Q419005
44	R205425

N plano	Firma	Fecha	Aparato	Lamina	
C-1050		6-2001	MUEBLE MARMITAS MG9-10, 15, 20	1	Fagor Industrial S.Coop. FAGOR Oñate

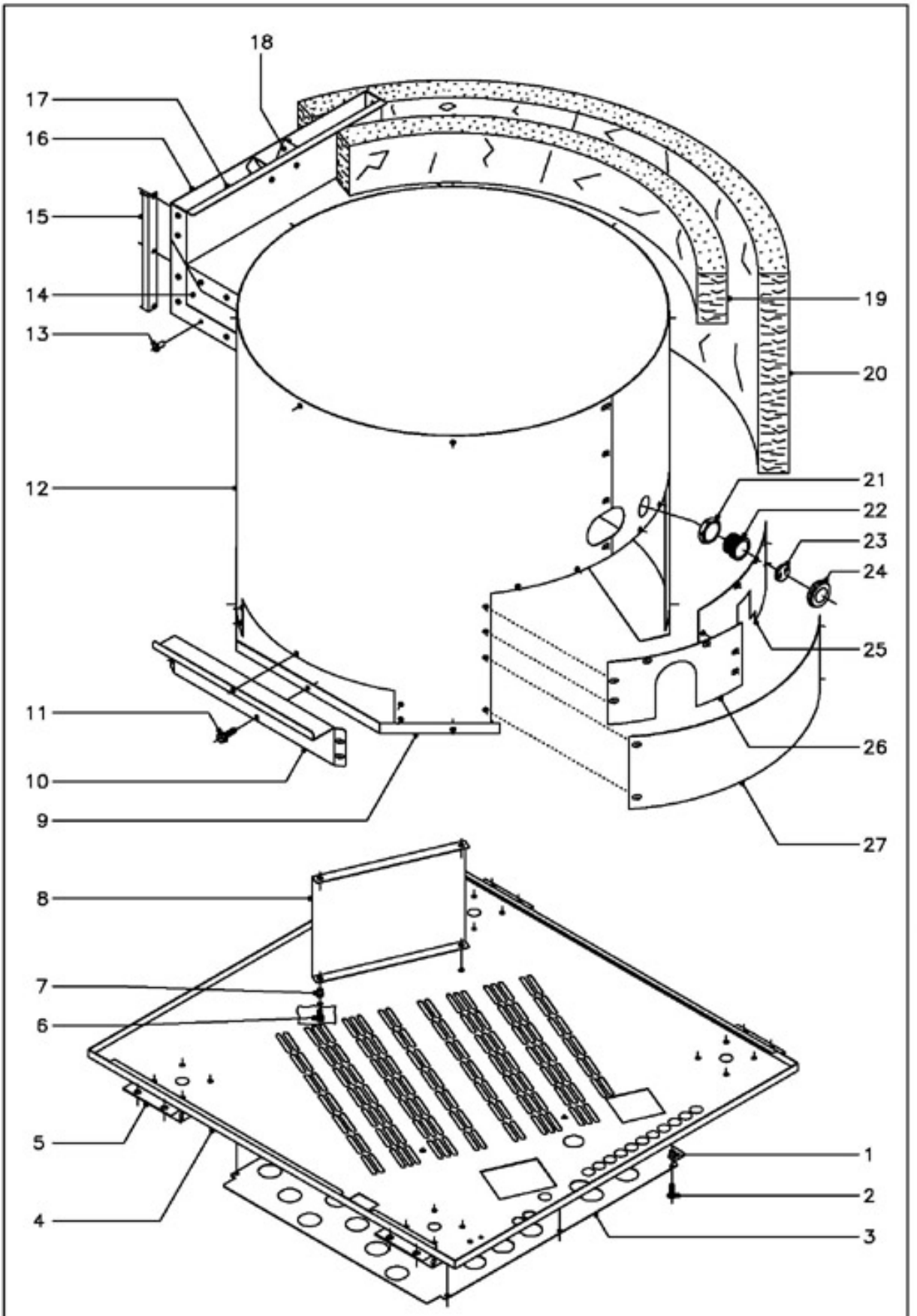

1	Q221342
2	Q152004
3	S272610
4	S272606
4	S062811
4	S372814
5	S032631
6	Q012031
7	Q221342
8	S012616
8	S032639
8	S062606
9	S032636
9	S042625
10	S272609
11	Q151323
12	S012615
12	S032635
12	S272605
12	S062605
13	Q419005
14	S032641
14	S042631
15	X162657
16	S032644
16	S042628
17	S032643
17	S042629
18	S035400
19	S116403
20	R092622
21	Q223014
22	9294500
23	9294600
24	9294400
25	S032637
25	S272607
26	S032638
26	S272608
27	S012617
27	S062607

N plano	Firma	Fecha	Aparato	Lamina	Fagor Industrial S.Coop. FAGOR
C-1051		6-2001	PIEZAS INTERIORES MARMITAS MG9-10, 15, 20	2	Onate

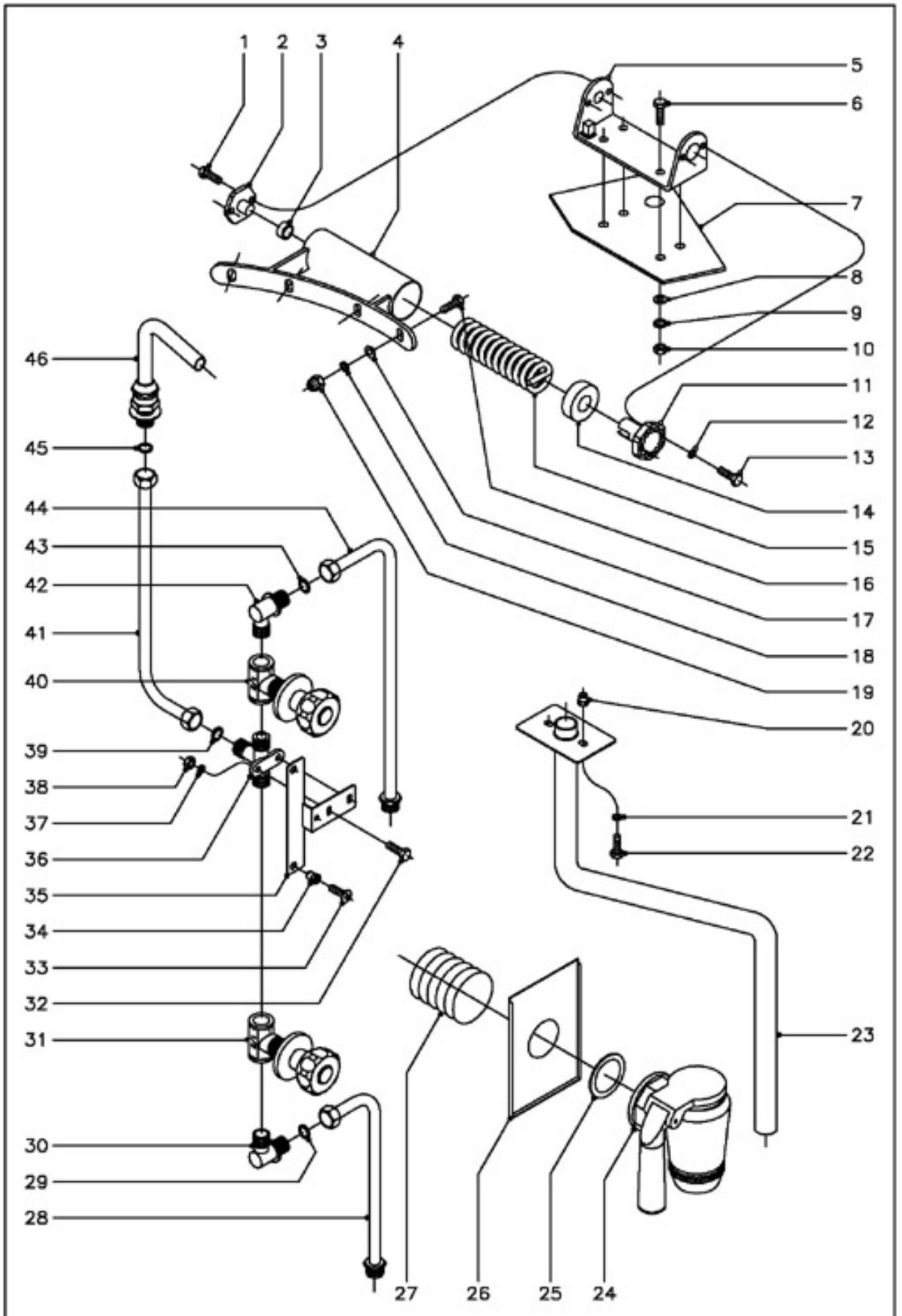

N plano	Firma	Fecha	Aparato TOMAS DE AGUA, DESAGUES Y BISAGRA TAPA	Lamina	Fagor Industrial S.Coop. FAGOR
C-1052		6-2001	MARMITAS MG9-10, 15, 20	3	Oñate

1	Q012041
2	S116119
3	S116126
4	S036143
4	S036146
5	S036131
6	Q012055
7	S026102
8	Q232050
9	Q262050
10	Q162050
11	S116120
12	Q262040
13	Q012042
14	S116118
15	S116121
16	Q012053
17	Q232050
18	Q262050
19	Q212051
20	Q221342
21	Q262030
22	Q012032
23	S036119
23	S065004
24	S112150
25	S112152
26	S112803
27	S112105
28	S035036
28	S065020
28	S375007
29	Q306024
30	S115013
31	S112151
32	Q012042
33	Q152004
34	Q221342
35	S032640
36	S205022
37	Q262040

38	Q162040
39	Q306024
40	S112154
41	S035032
42	S115013
43	Q306024
44	S035035
44	S065018
44	S345010
45	Q306024
46	S052100

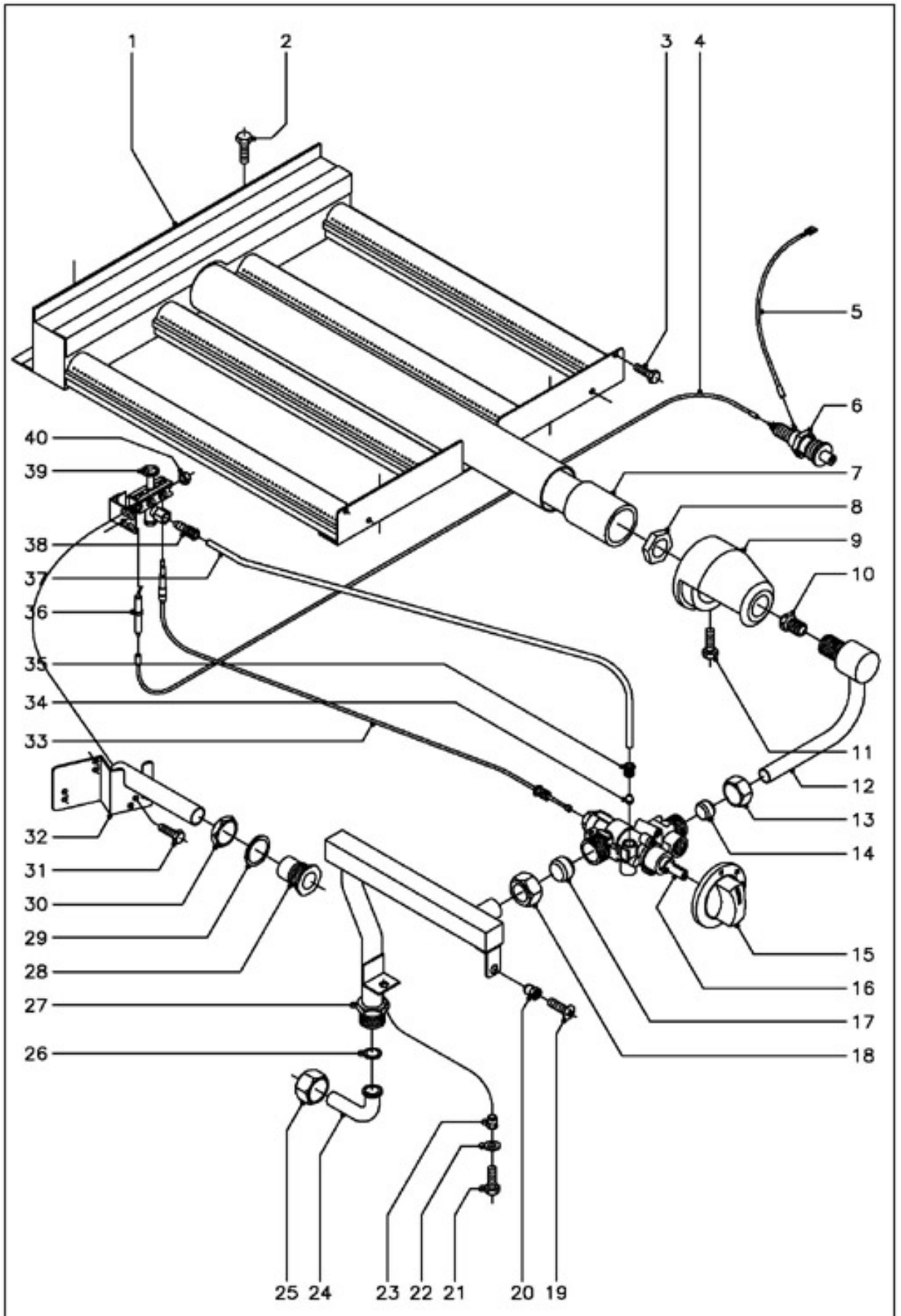

N plano C-1053	Firma	Fecha 6-2001	Aparato PARTE FUNCIONAL GAS MARMITAS MG9-10, 15, 20	Lamina 4	Fagor Industrial S.Coop. Oñate	FAGOR

1	S275705
2	Q012031
3	Q012031
4	U323030
5	U333003
6	S113034
7	S135733
8	Q221302
9	0628100
10	S012400
10	S032400
10	S172400
10	S012401
10	S114401
10	S114400
10	S012402
10	S032401
10	S172402
11	Q012043
12	S015010
12	S035025
12	S045025
13	S312105
14	S312106
15	S312110
16	S312101
17	S312104
18	S312103
19	Q152004

20	Q221342
21	Q012042
22	Q302022
23	Q221343
24	U565007
25	U725006
26	Q306052
27	S035030
27	S065016
27	S035030
28	S112804
29	Q306027
30	Q221324
31	Q012031
32	S045028
33	U562130
34	X205028
35	S312107
36	X012101
37	S015012
37	S035027
37	S045027
38	U134323
39	R202100
	U442138
	U442137
40	Q162030

		BUTANO - PROPANO
10	S012400	Tobera Ø 2,20
10	S032400	Tobera Ø 2,45
10	S172400	Tobera Ø 2,55
39	U442138	Inyector piloto Ø 0,25
s/n	U136501	Indicador (Butano - Propano)
		GAS NATURAL
10	S012401	Tobera Ø 3,10
10	S114401	Tobera Ø 3,65
10	S114400	Tobera Ø 3,80
39	U442137	Inyector piloto Ø 0,40
s/n	U134402	Indicador (Gas Natural)
		GAS VILLA
10	S012402	Tobera Ø 5,90
10	S032401	Tobera Ø 6,90
10	S172402	Tobera Ø 7,75
39	U442138	Inyector piloto Ø 0,25
s/n	U134310	Indicador (Gas Villa)